Changes for the Better

MITSUBISHI ELECTRIC

SPLIT-TYPE, HEAT PUMP AIR CONDITIONERS
SPLIT-TYPE, AIR CONDITIONERS

May 2008

No. OC328
REVISED EDITION-B

SERVICE MANUAL

Series PCA Ceiling Suspended R407C/R410A

Indoor unit [Model names]	[Service Ref.]	
PCA-RP50GA	PCA-RP50GA	PCA-RP50GA#1
PCA-RP50GA2	PCA-RP50GA2	PCA-RP50GA2#1
PCA-RP60GA	PCA-RP60GA	PCA-RP60GA#1
PCA-RP71GA	PCA-RP71GA	PCA-RP71GA#1
PCA-RP100GA	PCA-RP100GA	PCA-RP100GA#1
PCA-RP125GA	PCA-RP125GA	PCA-RP125GA#1
PCA-RP140GA	PCA-RP140GA	PCA-RP140GA#1

Revision :
- PCA-RP50~140GA(2)#1 are added in REVISED EDITION-B.
- RoHS PARTS LIST added.
- Some descriptions have been modified.

- Please void OC328 REVISED EDITION-A

Series PCH R407C

PCH-P50GAH	PCH-P50GAH
PCH-P60GAH	PCH-P60GAH
PCH-P71GAH	PCH-P71GAH
PCH-P100GAH	PCH-P100GAH
PCH-P125GAH	PCH-P125GAH
PCH-P140GAH	PCH-P140GAH

NOTE:
- This manual describes only service data of the indoor units.
- RoHS compliant products have <G> mark on the spec name plate.
- For servicing of RoHS compliant products, refer to the RoHS Parts List.

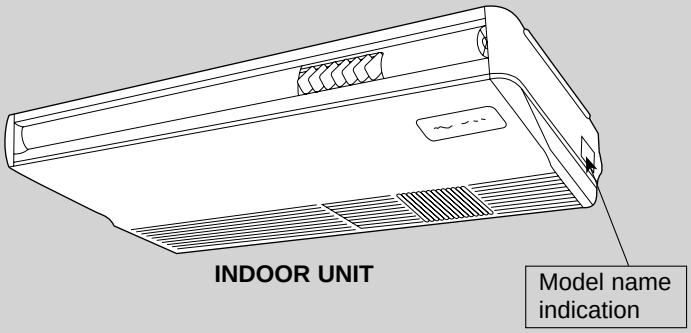

INDOOR UNIT

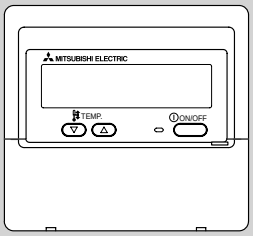

REMOTE CONTROLLER

CONTENTS

Mr.SLIM™

1 TECHNICAL CHANGES

PCA-RP50GA(2) ➔ PCA-RP50GA(2)#1
PCA-RP60GA ➔ PCA-RP60GA#1
PCA-RP71GA ➔ PCA-RP71GA#1
PCA-RP100GA ➔ PCA-RP100GA#1
PCA-RP125GA ➔ PCA-RP125GA#1
PCA-RP140GA ➔ PCA-RP140GA#1

INDOOR CONTROLLER BOARD(I.B.) has been changed.

2 REFERENCE MANUAL

2-1. OUTDOOR UNIT'S SERVICE MANUAL

Service Ref.	Service Manual No.
MXZ-8A140VA / VA1/ VA2 / VA3	OC316
SUZ-KA50/60/71VA(1).TH	OC322
SUZ-KA50/60/71VA(1).TH-A	OC323
PUHZ-RP35/50/60/71/100/125/140VHA(1) PUHZ-RP100/125/140YHA	OC334
PUHZ-RP71/100/125/140VHA(1)-A	OC337
PUHZ-RP200/250YHA(1)(2)	OC338
PUHZ-RP200/250YHA(1)-A	OC339
PU(H)-P • VGAA.UK PU(H)-P • YGAA.UK	OC336
PUHZ-P100/125/140VHA.UK	OC359
PUHZ-RP35/50/60/71/100/125/140VHA2(1) PUHZ-RP100/125/140YHA2(1) PUHZ-RP35/50/60/71/100VHA3 PUHZ-RP100YHA3	OC374
PU(H)-P71/100VHA(1).UK PU(H)-P100/125/140YHA(1).UK	OC379
PUHZ-P100/125/140VHA2(1).UK	OCH415 / OCB415
PUHZ-RP71/100/125/140VHA2-A PUHZ-RP100/125/140YHA2-A	OCH422 / OCB422
PUHZ-BP100/125/140VHA-A PUHZ-BP200/250YHA-A	OCH423 / OCB423
PUHZ-P200/250YHA2	OCH424 / OCB424
PUHZ-HRP71/100VHA PUHZ-HRP100/125YHA	OCH425 / OCB425
PUHZ-RP200/250YHA2	OCH428 / OCB428

2-2. TECHNICAL DATA BOOK

Series (Outdoor unit)	Manual No.
PUHZ-RP • HA(-A)	OCS01
PU(H)-P • GAA.UK	OCS02
SUZ-KA • VA	OCS03
PUHZ-RP • HA2	OCS05
PUHZ-P • HA	OCS06
PU(H)-P • HA	OCS07
PUHZ-P • VHA2, PUHZ-P • YHA	OCS08
PUHZ-RP • HA2-A	OCS09
PUHZ-BP • HA	OCS10
PUHZ-HRP • HA	OCS11

3 SAFETY PRECAUTION

3-1. ALWAYS OBSERVE FOR SAFETY

Before obtaining access to terminal, all supply circuits must be disconnected.

3-2. CAUTIONS RELATED TO NEW REFRIGERANT

Cautions for units utilising refrigerant R407C

Do not use the existing refrigerant piping.

The old refrigerant and lubricant in the existing piping contains a large amount of chlorine which may cause the lubricant deterioration of the new unit.

Use “low residual oil piping”

If there is a large amount of residual oil (hydraulic oil, etc.) inside the piping and joints, deterioration of the lubricant will result.

Store the piping to be used during installation indoors with keep both ends sealed until just before brazing.
(Store elbows and other joints in a plastic bag.)

If dust, dirt, or water enters the refrigerant cycle, deterioration of the oil and compressor trouble may result.

Use ESTER , ETHER or HAB as the lubricant to coat flares and flange connection parts.

If large amount of mineral oil enter, that can cause deterioration of refrigerant oil etc.

Use liquid refrigerant to charge the system.

If gas refrigerant is used to seal the system, the composition of the refrigerant in the cylinder will change and performance may drop.

Do not use a refrigerant other than R407C.

If another refrigerant (R22, etc.) is used, the chlorine in the refrigerant may cause the lubricant deterioration.

Use a vacuum pump with a reverse flow check valve.

The vacuum pump oil may flow back into the refrigerant cycle and cause the lubricant deterioration.

Ventilate the room if refrigerant leaks during operation. If refrigerant comes into contact with a flame, poisonous gases will be released.

[1] Cautions for service

·After recovering the all refrigerant in the unit, proceed to working.
·Do not release refrigerant in the air.
·After completing the repair service, recharge the cycle with the specified amount of liquid refrigerant.

[2] Refrigerant recharging

(1) Refrigerant recharging process

①Direct charging from the cylinder.

·R407C cylinder are available on the market has a syphon pipe.
·Leave the syphon pipe cylinder standing and recharge it.
(By liquid refrigerant)

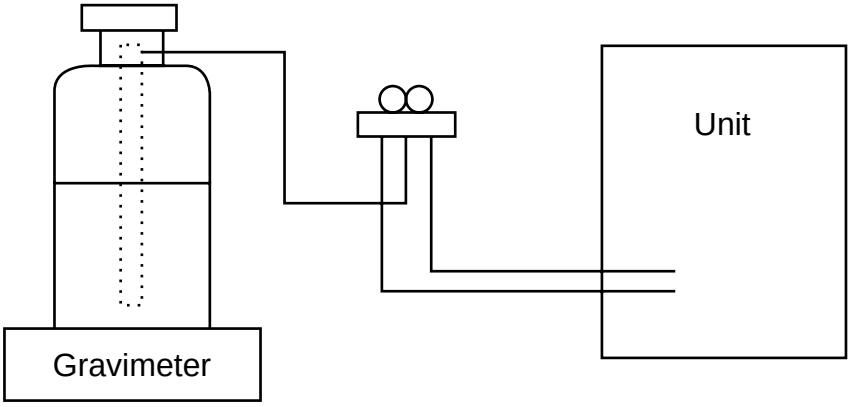

(2) Recharge in refrigerant leakage case

·After recovering the all refrigerant in the unit, proceed to working.
·Do not release the refrigerant in the air.
·After completing the repair service, recharge the cycle with the specified amount of liquid refrigerant.

[3] Service tools

Use the below service tools as exclusive tools for R407C refrigerant.

No.	Tool name	Specifications
①	Gauge manifold	·Only for R407C.
		·Use the existing fitting SPECIFICATIONS. (UNF7/16)
		·Use high-tension side pressure of 3.43MPa·G or over.
②	Charge hose	·Only for R407C.
		·Use pressure performance of 5.10MPa·G or over.
③	Electronic scale	———
④	Gas leak detector	·Use the detector for R134a or R407C.
⑤	Adapter for reverse flow check.	·Attach on vacuum pump.
⑥	Refrigerant charge base.	———
⑦	Refrigerant cylinder.	·For R407C ·Top of cylinder (Brown) ·Cylinder with syphon
⑧	Refrigerant recovery equipment.	———

CAUTIONS RELATED TO NEW REFRIGERANT

Cautions for units utilising refrigerant R410A

Use new refrigerant pipes.

In case of using the existing pipes for R22, be careful with the followings.
· For RP60/71VHA3 and RP100/125/140, be sure to perform replacement operation before test run.
· Change flare nut to the one provided with this product. Use a newly flared pipe.
· Avoid using thin pipes.

Make sure that the inside and outside of refrigerant piping is clean and it has no contamination such as sulfur hazardous for use, oxides, dirt, shaving particles, etc.
In addition, use pipes with specified thickness.

Contamination inside refrigerant piping can cause deterioration of refrigerant oil etc.

Store the piping to be used during installation indoors and keep both ends of the piping sealed until just before brazing. (Leave elbow joints, etc. in their packaging.)

If dirt, dust or moisture enter into refrigerant cycle, that can cause deterioration of refrigerant oil or malfunction of compressor.

Use ester oil, ether oil or alkylbenzene oil (small amount) as the refrigerant oil applied to flares and flange connections.

If large amount of mineral oil enter, that can cause deterioration of refrigerant oil etc.

Charge refrigerant from liquid phase of gas cylinder.

If the refrigerant is charged from gas phase, composition change may occur in refrigerant and the efficiency will be lowered.

Do not use refrigerant other than R410A.

If other refrigerant (R22 etc.) is used, chlorine in refrigerant can cause deterioration of refrigerant oil etc.

Use a vacuum pump with a reverse flow check valve.

Vacuum pump oil may flow back into refrigerant cycle and that can cause deterioration of refrigerant oil etc.

Use the following tools specifically designed for use with R410A refrigerant.

The following tools are necessary to use R410A refrigerant.

Tools for R410A	
Gauge manifold	Flare tool
Charge hose	Size adjustment gauge
Gas leak detector	Vacuum pump adaptor
Torque wrench	Electronic refrigerant charging scale

Keep the tools with care.

If dirt, dust or moisture enter into refrigerant cycle, that can cause deterioration of refrigerant oil or malfunction of compressor.

Do not use a charging cylinder.

If a charging cylinder is used, the composition of refrigerant will change and the efficiency will be lowered.

Ventilate the room if refrigerant leaks during operation. If refrigerant comes into contact with a flame, poisonous gases will be released.

[1] Cautions for service

(1) Perform service after collecting the refrigerant left in unit completely.
(2) Do not release refrigerant in the air.
(3) After completing service, charge the cycle with specified amount of refrigerant.
(4) When performing service, install a filter drier simultaneously.
Be sure to use a filter drier for new refrigerant.

[2] Additional refrigerant charge

When charging directly from cylinder

· Check that cylinder for R410A on the market is syphon type.
· Charging should be performed with the cylinder of syphon stood vertically. (Refrigerant is charged from liquid phase.)

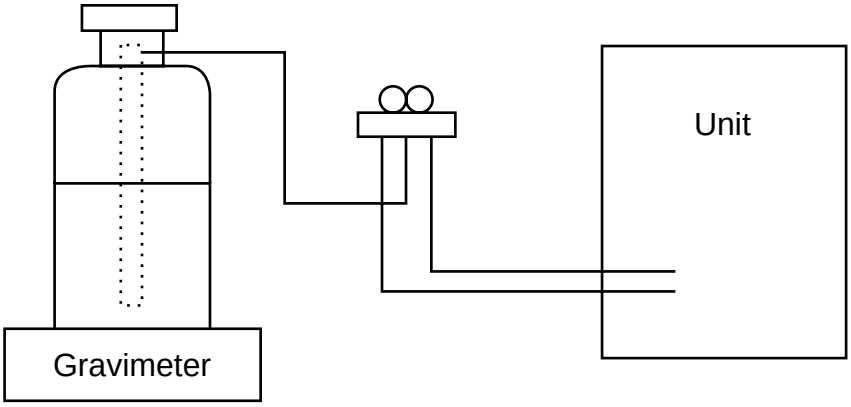

[3] Service tools

Use the below service tools as exclusive tools for R410A refrigerant.

No.		Specifications
①	Gauge manifold	·Only for R410A
		·Use the existing fitting specifications. (UNF1/2)
		·Use high-tension side pressure of 5.3MPa·G or over.
②	Charge hose	·Only for R410A
		·Use pressure performance of 5.09MPa·G or over.
③	Electronic scale	——
④	Gas leak detector	·Use the detector for R134a, R407C or R410A.
⑤	Adaptor for reverse flow check	·Attach on vacuum pump.
⑥	Refrigerant charge base	——
⑦	Refrigerant cylinder	·Only for R410A Top of cylinder (Pink) Cylinder with syphon
⑧	Refrigerant recovery equipment	——

4 PART NAMES AND FUNCTIONS

Indoor Unit

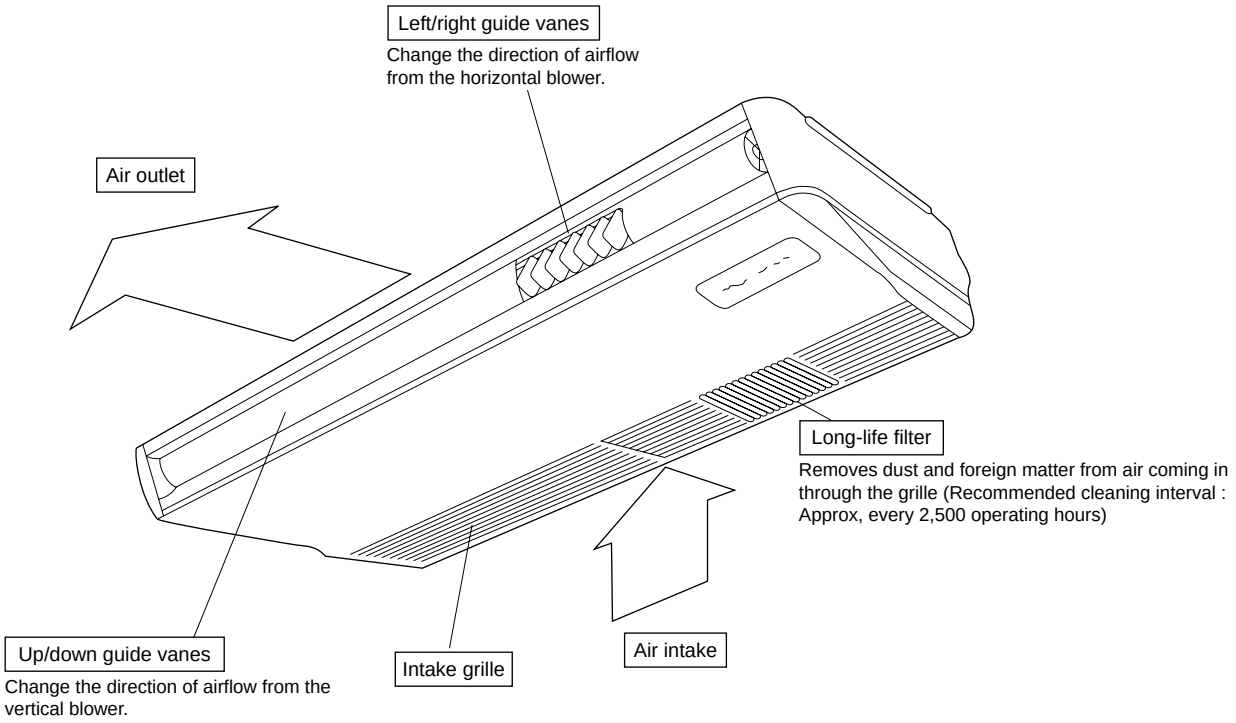

Remote controller

Once the controls are set, the same operation mode can be repeated by simply pressing the ON/OFF button.

Operation buttons

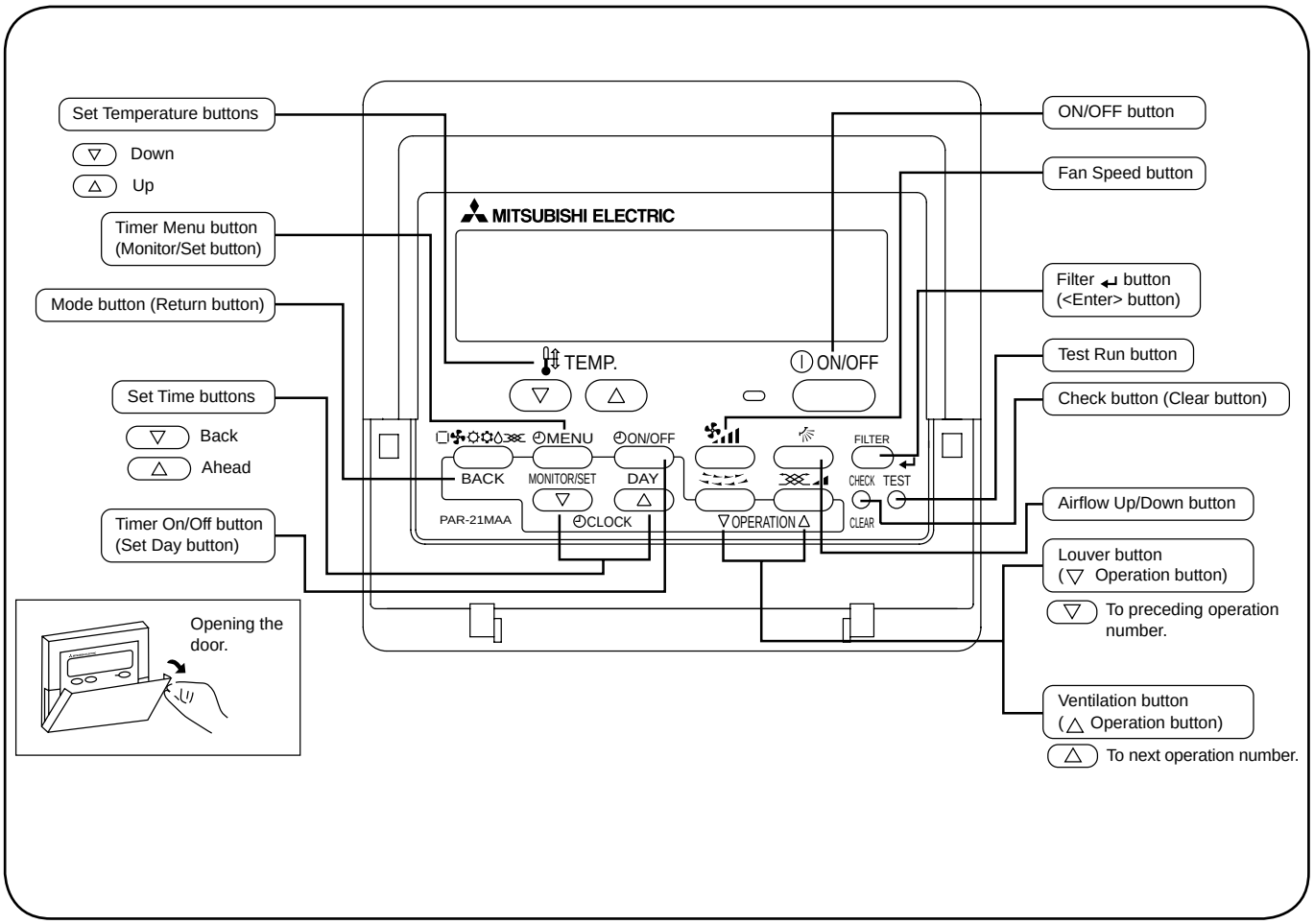

Display

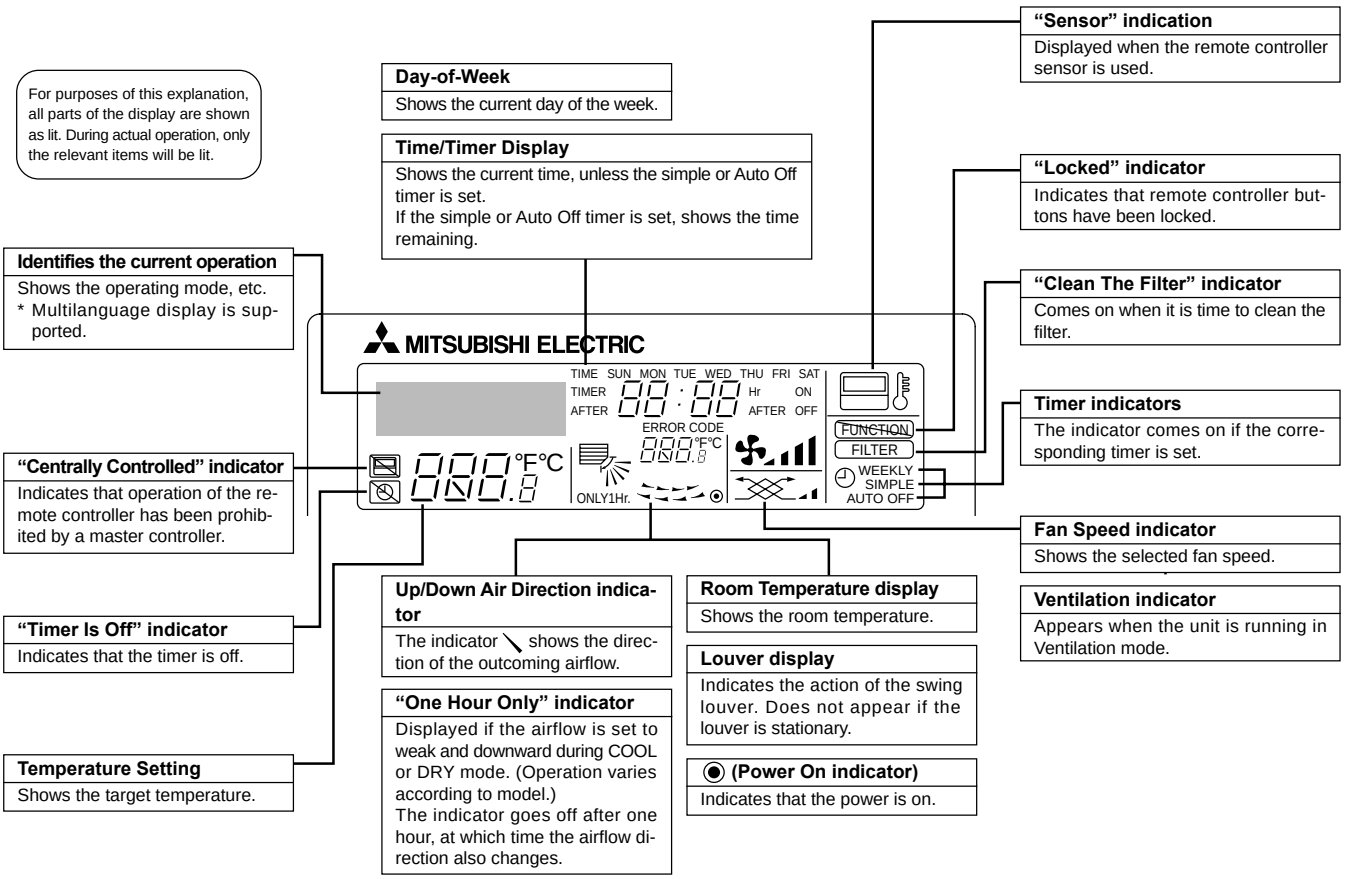

Caution

Only the Power on indicator lights when the unit is stopped and power supplied to the unit.

If you press a button for a feature that is not installed at the indoor unit, the remote controller will display the "Not Available" message.

If you are using the remote controller to drive multiple indoor units, this message will appear only if he feature is not present at the parent unit.

When power is turned ON for the first time, it is normal that "PLEASE WAIT" is displayed on the room temperature indication (For max. 2minutes). Please wait until this "PLEASE WAIT" indication disappear then start the operation.

5 SPECIFICATIONS

INDOOR UNIT	**Service Ref.**			**PCA-RP50GA, PCA-RP50GA#1**	
	Mode			Cooling	Heating
	Power supply(phase, cycle, voltage)			Single phase, 50Hz, 230V	
		Input	kW	0.09	0.09
		Running current	A	0.41	0.41
		Starting current	A	1.20	1.20
	External finish			Munsell 0.70Y 8.59/0.97	
	Heat exchanger			Plate fin coil	
	Fan	Fan(drive) x No.		Sirocco fan (direct) x 2	
		Fan motor output	kW	0.054	
		Airflow(Low-Medium2-Medium1-High)	m³/min(CFM)	10-11-12-13(355-390-425-460)	
		External static pressure	Pa(mmAq)	0(direct blow)	
	Operation control & Thermostat			Remote controller & built-in	
	Noise level(Low-Medium2-Medium1-High)		dB	37-38-40-42	
	Unit drain pipe I.D.		mm(in.)	26(1)	
	Dimensions	W	mm(in.)	1,000(39-3/8)	
		D	mm(in.)	680(26-3/4)	
		H	mm(in.)	210(8-1/4)	
	Weight		kg(lbs)	27(60)	

INDOOR UNIT	**Service Ref.**			**PCA-RP50GA2, PCA-RP50GA2#1**	
	Mode			Cooling	Heating
	Power supply(phase, cycle, voltage)			Single phase, 50Hz, 230V	
		Input	kW	0.12	0.12
		Running current	A	0.53	0.53
		Starting current	A	1.27	1.27
	External finish			Munsell 0.70Y 8.59/0.97	
	Heat exchanger			Plate fin coil	
	Fan	Fan(drive) x No.		Sirocco fan (direct) x 3	
		Fan motor output	kW	0.070	
		Airflow(Low-Medium2-Medium1-High)	m³/min(CFM)	14-15-16-18(495-530-565-635)	
		External static pressure	Pa(mmAq)	0(direct blow)	
	Operation control & Thermostat			Remote controller & built-in	
	Noise level(Low-Medium2-Medium1-High)		dB	37-39-41-43	
	Unit drain pipe I.D.		mm(in.)	26(1)	
	Dimensions	W	mm(in.)	1,310(51-9/16)	
		D	mm(in.)	680(26-3/4)	
		H	mm(in.)	210(8-1/4)	
	Weight		kg(lbs)	34(75)	

INDOOR UNIT	**Service Ref.**			**PCA-RP60GA, PCA-RP60GA#1**	
	Mode			Cooling	Heating
	Power supply(phase, cycle, voltage)			Single phase, 50Hz, 230V	
		Input	kW	0.12	0.12
		Running current	A	0.53	0.53
		Starting current	A	1.27	1.27
	External finish			Munsell 0.70Y 8.59/0.97	
	Heat exchanger			Plate fin coil	
	Fan	Fan(drive) x No.		Sirocco fan (direct) x 3	
		Fan motor output	kW	0.070	
		Airflow(Low-Medium2-Medium1-High)	m³/min(CFM)	14-15-16-18(495-530-565-635)	
		External static pressure	Pa(mmAq)	0(direct blow)	
	Operation control & Thermostat			Remote controller & built-in	
	Noise level(Low-Medium2-Medium1-High)		dB	37-39-41-43	
	Unit drain pipe I.D.		mm(in.)	26(1)	
	Dimensions	W	mm(in.)	1,310(51-9/16)	
		D	mm(in.)	680(26-3/4)	
		H	mm(in.)	210(8-1/4)	
	Weight		kg(lbs)	34(75)	

INDOOR UNIT	**Service Ref.**			**PCA-RP71GA, PCA-RP71GA#1**	
	Mode			Cooling	Heating
	Power supply(phase, cycle, voltage)			Single phase, 50Hz, 230V	
		Input	kW	0.12	0.12
		Running current	A	0.53	0.53
		Starting current	A	1.27	1.27
	External finish			Munsell 0.70Y 8.59/0.97	
	Heat exchanger			Plate fin coil	
	Fan	Fan(drive) x No.		Sirocco fan (direct) x 3	
		Fan motor output	kW	0.070	
		Airflow(Low-Medium2-Medium1-High)	m³/min(CFM)	14-15-16-18(495-530-565-635)	
		External static pressure	Pa(mmAq)	0(direct blow)	
	Operation control & Thermostat			Remote controller & built-in	
	Noise level(Low-Medium2-Medium1-High)		dB	37-39-41-43	
	Unit drain pipe I.D.		mm(in.)	26(1)	
	Dimensions	W	mm(in.)	1,310(51-9/16)	
		D	mm(in.)	680(26-3/4)	
		H	mm(in.)	210(8-1/4)	
	Weight		kg(lbs)	34(75)	

INDOOR UNIT	**Service Ref.**			**PCA-RP100GA, PCA-RP100GA#1**	
	Mode			Cooling	Heating
	Power supply(phase, cycle, voltage)			Single phase, 50Hz, 230V	
		Input	kW	0.15	0.15
		Running current	A	0.69	0.69
		Starting current	A	1.48	1.48
	External finish			Munsell 0.70Y 8.59/0.97	
	Heat exchanger			Plate fin coil	
	Fan	Fan(drive) x No.		Sirocco fan (direct) x 3	
		Fan motor output	kW	0.090	
		Airflow(Low-Medium2-Medium1-High)	m³/min(CFM)	20-21-23-25(705-740-810-885)	
		External static pressure	Pa(mmAq)	0(direct blow)	
	Operation control & Thermostat			Remote controller & built-in	
	Noise level(Low-Medium2-Medium1-High)		dB	40-41-43-45	
	Unit drain pipe I.D.		mm(in.)	26(1)	
	Dimensions	W	mm(in.)	1,310(51-9/16)	
		D	mm(in.)	680(26-3/4)	
		H	mm(in.)	270(10-5/8)	
	Weight		kg(lbs)	37(82)	

INDOOR UNIT	**Service Ref.**			**PCA-RP125GA, PCA-RP125GA#1**	
	Mode			Cooling	Heating
	Power supply(phase, cycle, voltage)			Single phase, 50Hz, 230V	
		Input	kW	0.22	0.22
		Running current	A	1.01	1.01
		Starting current	A	2.20	2.20
	External finish			Munsell 0.70Y 8.59/0.97	
	Heat exchanger			Plate fin coil	
	Fan	Fan(drive) x No.		Sirocco fan (direct) x 4	
		Fan motor output	kW	0.150	
		Airflow(Low-Medium2-Medium1-High)	m³/min(CFM)	27-30-32-34(955-1,060-1,130-1,200)	
		External static pressure	Pa(mmAq)	0(direct blow)	
	Operation control & Thermostat			Remote controller & built-in	
	Noise level(Low-Medium2-Medium1-High)		dB	41-43-45-46	
	Unit drain pipe I.D.		mm(in.)	26(1)	
	Dimensions	W	mm(in.)	1,620(63-3/4)	
		D	mm(in.)	680(26-3/4)	
		H	mm(in.)	270(10-5/8)	
	Weight		kg(lbs)	43(95)	

INDOOR UNIT	**Service Ref.**			**PCA-RP140GA, PCA-RP140GA#1**	
	Mode			Cooling	Heating
	Power supply(phase, cycle, voltage)			Single phase, 50Hz, 230V	
		Input	kW	0.22	0.22
		Running current	A	1.01	1.01
		Starting current	A	2.20	2.20
	External finish			Munsell 0.70Y 8.59/0.97	
	Heat exchanger			Plate fin coil	
	Fan	Fan(drive) x No.		Sirocco fan (direct) x 4	
		Fan motor output	kW	0.150	
		Airflow(Low-Medium2-Medium1-High)	m³/min(CFM)	27-30-32-34(955-1,060-1,130-1,200)	
		External static pressure	Pa(mmAq)	0(direct blow)	
	Operation control & Thermostat			Remote controller & built-in	
	Noise level(Low-Medium2-Medium1-High)		dB	42-44-46-48	
	Unit drain pipe I.D.		mm(in.)	26(1)	
	Dimensions	W	mm(in.)	1,620(63-3/4)	
		D	mm(in.)	680(26-3/4)	
		H	mm(in.)	270(10-5/8)	
	Weight		kg(lbs)	45(99)	

INDOOR UNIT	**Service Ref.**			**PCH-P50GAH**	
	Mode			Cooling	Heating
	Power supply(phase, cycle, voltage)			Single phase, 50Hz, 230V	
		Input ※1	kW	0.09	0.09<1.29>
		Running current ※1	A	0.41	0.41<5.61>
		Starting current ※1	A	1.20	1.20<5.61>
	External finish			Munsell 0.70Y 8.59/0.97	
	Heat exchanger			Plate fin coil	
	Fan	Fan(drive) x No.		Sirocco fan (direct) x 2	
		Fan motor output	kW	0.054	
		Airflow(Low-Medium2-Medium1-High)	m³/min(CFM)	10-11-12-13(355-390-425-460)	
		External static pressure	Pa(mmAq)	0(direct blow)	
	Booster heater ※1		kW	<1.29>	
	Operation control & Thermostat			Remote controller & built-in	
	Noise level(Low-Medium2-Medium1-High)		dB	37-38-40-42	
	Unit drain pipe I.D.		mm(in.)	26(1)	
	Dimensions	W	mm(in.)	1,000(39-3/8)	
		D	mm(in.)	680(26-3/4)	
		H	mm(in.)	210(8-1/4)	
	Weight		kg(lbs)	28.5(63)	

INDOOR UNIT	**Service Ref.**			**PCH-P60GAH**	
	Mode			Cooling	Heating
	Power supply(phase, cycle, voltage)			Single phase, 50Hz, 230V	
		Input ※1	kW	0.12	0.12<1.93>
		Running current ※1	A	0.53	0.53<8.39>
		Starting current ※1	A	1.27	1.27<8.39>
	External finish			Munsell 0.70Y 8.59/0.97	
	Heat exchanger			Plate fin coil	
	Fan	Fan(drive) x No.		Sirocco fan (direct) x 3	
		Fan motor output	kW	0.070	
		Airflow(Low-Medium2-Medium1-High)	m³/min(CFM)	14-15-16-18(495-530-565-635)	
		External static pressure	Pa(mmAq)	0(direct blow)	
	Booster heater ※1		kW	<1.93>	
	Operation control & Thermostat			Remote controller & built-in	
	Noise level(Low-Medium2-Medium1-High)		dB	37-39-41-43	
	Unit drain pipe I.D.		mm(in.)	26(1)	
	Dimensions	W	mm(in.)	1,310(51-9/16)	
		D	mm(in.)	680(26-3/4)	
		H	mm(in.)	210(8-1/4)	
	Weight		kg(lbs)	36(79)	

INDOOR UNIT	**Service Ref.**			**PCH-P71GAH**	
	Mode			Cooling	Heating
	Power supply(phase, cycle, voltage)			Single phase, 50Hz, 230V	
		Input ※1	kW	0.12	0.12<1.93>
		Running current ※1	A	0.53	0.53<8.39>
		Starting current ※1	A	1.27	1.27<8.39>
	External finish			Munsell 0.70Y 8.59/0.97	
	Heat exchanger			Plate fin coil	
	Fan	Fan(drive) x No.		Sirocco fan (direct) x 3	
		Fan motor output	kW	0.070	
		Airflow(Low-Medium2-Medium1-High)	m³/min(CFM)	14-15-16-18(495-530-565-635)	
		External static pressure	Pa(mmAq)	0(direct blow)	
	Booster heater ※1		kW	<1.93>	
	Operation control & Thermostat			Remote controller & built-in	
	Noise level(Low-Medium2-Medium1-High)		dB	37-39-41-43	
	Unit drain pipe I.D.		mm(in.)	26(1)	
	Dimensions	W	mm(in.)	1,310(51-9/16)	
		D	mm(in.)	680(26-3/4)	
		H	mm(in.)	210(8-1/4)	
	Weight		kg(lbs)	36(79)	

※1 : < > Shows the only booster heater rating.

INDOOR UNIT	**Service Ref.**			**PCH-P100GAH**	
	Mode			Cooling	Heating
	Power supply(phase, cycle, voltage)			Single phase, 50Hz, 230V	
	Input ※1		kW	0.15	0.15<2.48>
	Running current ※1		A	0.69	0.69<10.78>
	Starting current ※1		A	1.48	1.48<10.78>
	External finish			Munsell 0.70Y 8.59/0.97	
	Heat exchanger			Plate fin coil	
	Fan	Fan(drive) x No.		Sirocco fan (direct) x 3	
		Fan motor output	kW	0.090	
		Airflow(Low-Medium2-Medium1-High)	m³/min(CFM)	20-21-23-25(705-740-810-885)	
		External static pressure	Pa(mmAq)	0(direct blow)	
	Booster heater ※1		kW	<2.48>	
	Operation control & Thermostat			Remote controller & built-in	
	Noise level(Low-Medium2-Medium1-High)		dB	40-41-43-45	
	Unit drain pipe I.D.		mm(in.)	26(1)	
	Dimensions	W	mm(in.)	1,310(51-9/16)	
		D	mm(in.)	680(26-3/4)	
		H	mm(in.)	270(10-5/8)	
	Weight		kg(lbs)	39.5(87)	

INDOOR UNIT	**Service Ref.**			**PCH-P125GAH**	
	Mode			Cooling	Heating
	Power supply(phase, cycle, voltage)			Single phase, 50Hz, 230V	
	Input ※1		kW	0.22	0.22<2.76>
	Running current ※1		A	1.01	1.01<12.00>
	Starting current ※1		A	2.20	2.20<12.00>
	External finish			Munsell 0.70Y 8.59/0.97	
	Heat exchanger			Plate fin coil	
	Fan	Fan(drive) x No.		Sirocco fan (direct) x 4	
		Fan motor output	kW	0.150	
		Airflow(Low-Medium2-Medium1-High)	m³/min(CFM)	27-30-32-34(955-1,060-1,130-1,200)	
		External static pressure	Pa(mmAq)	0(direct blow)	
	Booster heater ※1		kW	<2.76>	
	Operation control & Thermostat			Remote controller & built-in	
	Noise level(Low-Medium2-Medium1-High)		dB	41-43-45-46	
	Unit drain pipe I.D.		mm(in.)	26(1)	
	Dimensions	W	mm(in.)	1,620(63-3/4)	
		D	mm(in.)	680(26-3/4)	
		H	mm(in.)	270(10-5/8)	
	Weight		kg(lbs)	46(101)	

INDOOR UNIT	**Service Ref.**			**PCH-P140GAH**	
	Mode			Cooling	Heating
	Power supply(phase, cycle, voltage)			Single phase, 50Hz, 230V	
	Input ※1		kW	0.22	0.22<2.76>
	Running current ※1		A	1.01	1.01<12.00>
	Starting current ※1		A	2.20	2.20<12.00>
	External finish			Munsell 0.70Y 8.59/0.97	
	Heat exchanger			Plate fin coil	
	Fan	Fan(drive) x No.		Sirocco fan (direct) x 4	
		Fan motor output	kW	0.150	
		Airflow(Low-Medium2-Medium1-High)	m³/min(CFM)	27-30-32-34(955-1,060-1,130-1,200)	
		External static pressure	Pa(mmAq)	0(direct blow)	
	Booster heater ※1		kW	<2.76>	
	Operation control & Thermostat			Remote controller & built-in	
	Noise level(Low-Medium2-Medium1-High)		dB	42-44-46-48	
	Unit drain pipe I.D.		mm(in.)	26(1)	
	Dimensions	W	mm(in.)	1,620(63-3/4)	
		D	mm(in.)	680(26-3/4)	
		H	mm(in.)	270(10-5/8)	
	Weight		kg(lbs)	48(106)	

※1 : < > Shows the only booster heater rating.

6 NOISE CRITERION CURVES

PCA-RP50GA
PCA-RP50GA#1
PCH-P50GAH

NOTCH	SPL(dB)	LINE
High	42	○——○
Medium1	40	△——△
Medium2	38	●——●
Low	37	▲——▲

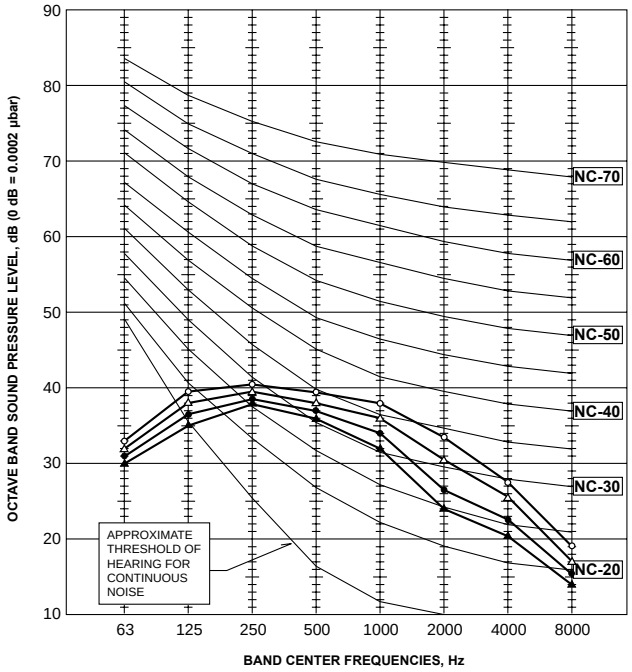

PCA-RP50GA2
PCA-RP50GA2#1
PCA-RP60/71GA
PCA-RP60/71GA#1
PCH-P60/71GAH

NOTCH	SPL(dB)	LINE
High	43	○——○
Medium1	41	△——△
Medium2	39	●——●
Low	37	▲——▲

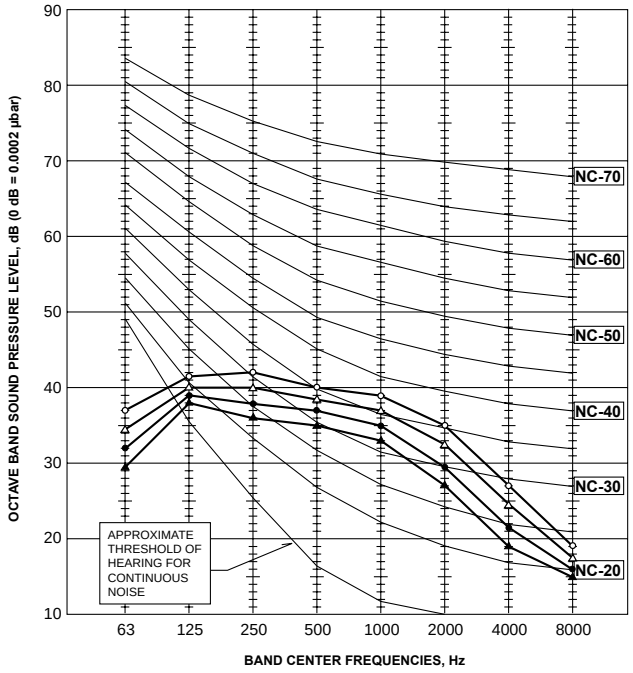

PCA-RP100GA
PCA-RP100GA#1
PCH-P100GAH

NOTCH	SPL(dB)	LINE
High	45	○——○
Medium1	43	△——△
Medium2	41	●——●
Low	40	▲——▲

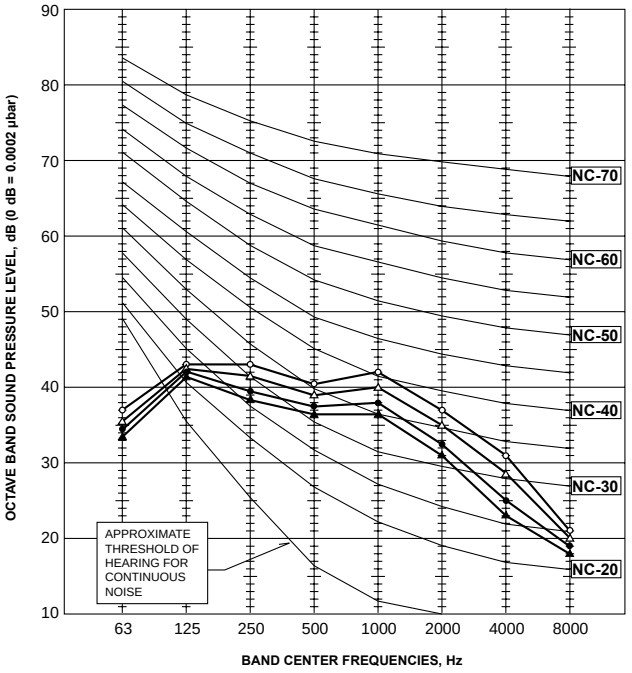

PCA-RP125GA
PCA-RP125GA#1
PCH-P125GAH

NOTCH	SPL(dB)	LINE
High	46	○——○
Medium1	45	△——△
Medium2	43	●——●
Low	41	▲——▲

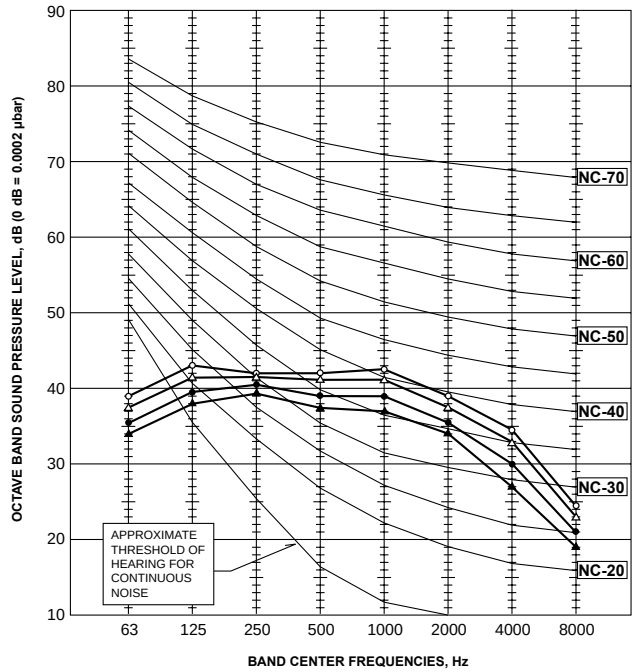

PCA-RP140GA
PCA-RP140GA#1
PCH-P140GAH

NOTCH	SPL(dB)	LINE
High	48	○——○
Medium1	46	△——△
Medium2	44	●——●
Low	42	▲——▲

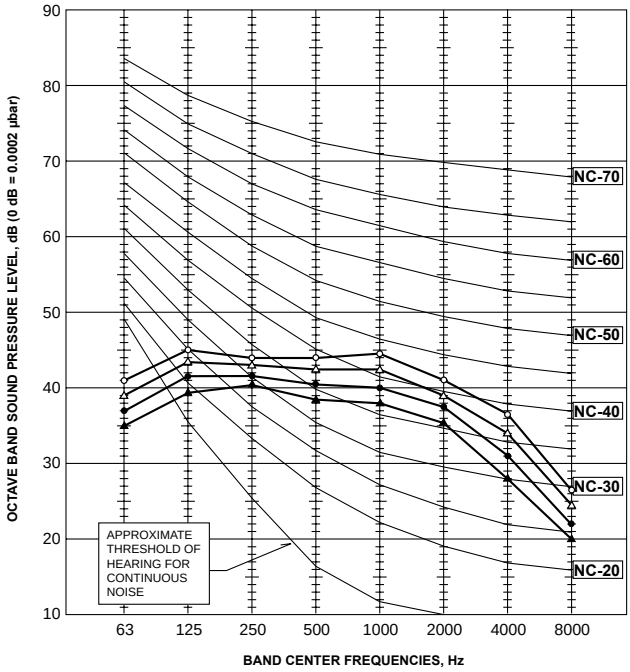

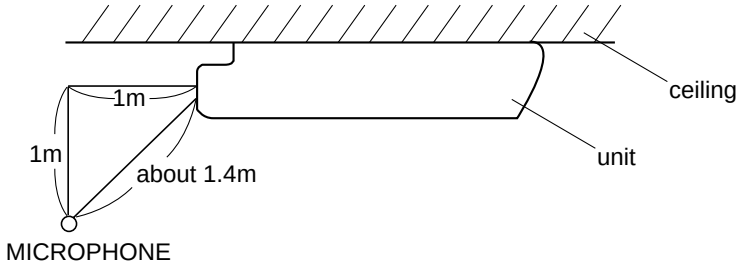

7 OUTLINES AND DIMENTIONS

INDOOR UNIT
PCA-RP50GA
PCA-RP50GA#1
PCH-P50GAH

Unit : mm

NOTES:
1. Use M10 or W3/8 screws for anchor bolt.
2. When optional drain lift-up mechanism is installed, always provide upward piping for refrigerant piping.

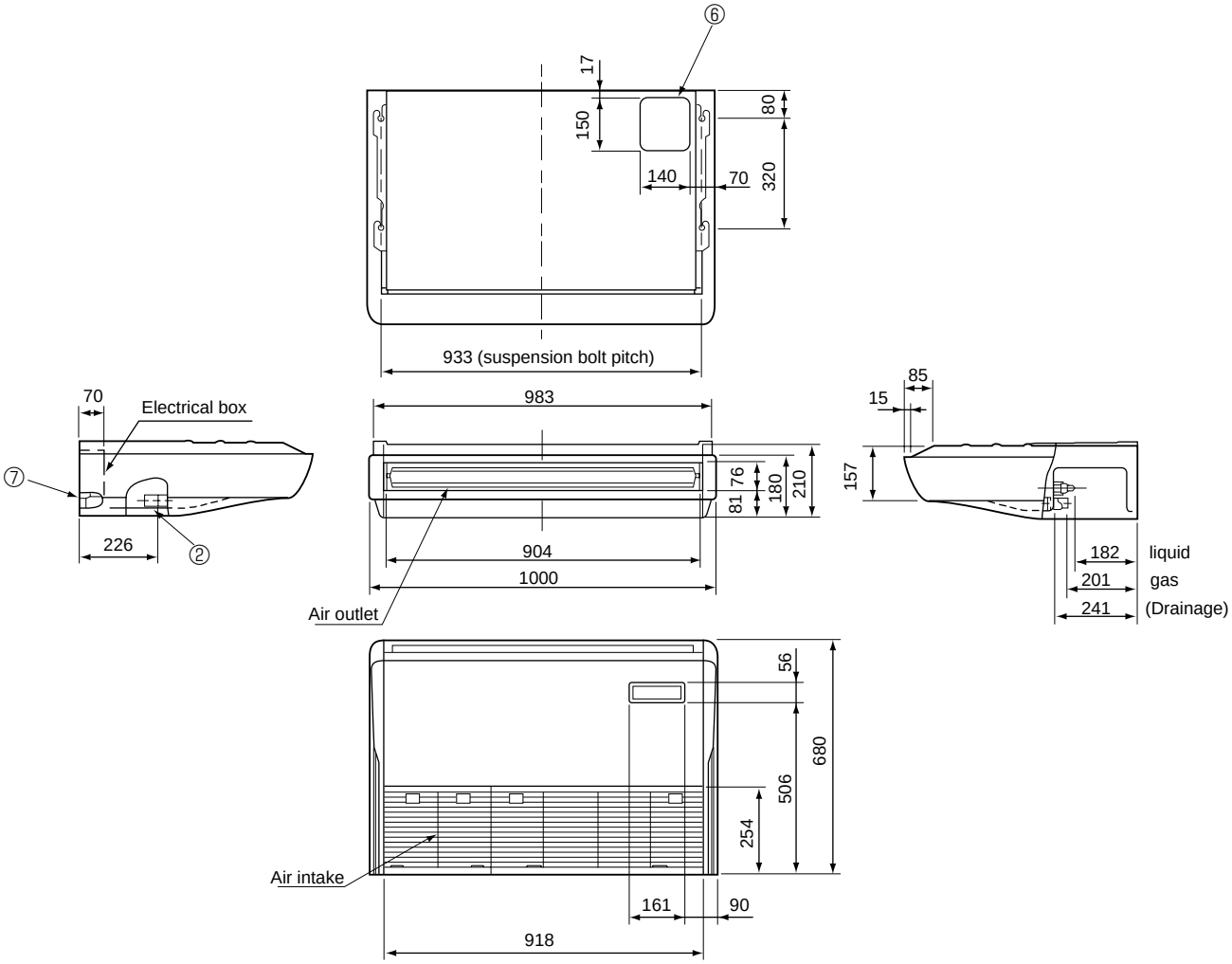

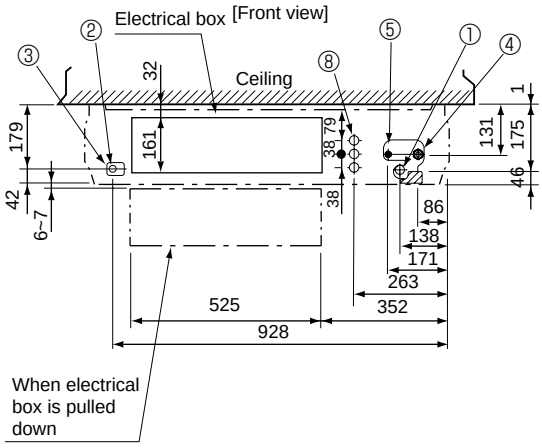

① Drainage pipe connection (26mm I.D.)
② Drainage pipe connection (for the left arrangement)
③ Knockout hole for left drain-piping arrangement
④ Refrigerant-pipe connection (gas pipe side/flared connection)
⑤ Refrigerant-pipe connection (liquid pipe side/flared connection)
⑥ Knockout hole for upper drain pipe arrangement
⑦ Knockout hole for left drain pipe arrangement
⑧ Knockout hole for wiring arrangement

Use the current nuts meeting the pipe size of the outdoor unit.

Available pipe size

	RP50	P50
⑤ LIQUID SIDE	ϕ6.35 ○	—
	ϕ9.52	ϕ9.52 ○
④ GAS SIDE	ϕ12.7 ○	—
	ϕ15.88	ϕ15.88 ○

○ : Initial flare nut size

PCA-RP50GA2
PCA-RP50GA2#1
PCA-RP60GA
PCA-RP71GA
PCA-RP60GA#1
PCA-RP71GA#1
PCH-P60GAH
PCH-P71GAH

Unit : mm

NOTES:
1. Use M10 or W3/8 screws for anchor bolt.
2. When optional drain lift-up mechanism is installed, always provide upward piping for refrigerant piping.

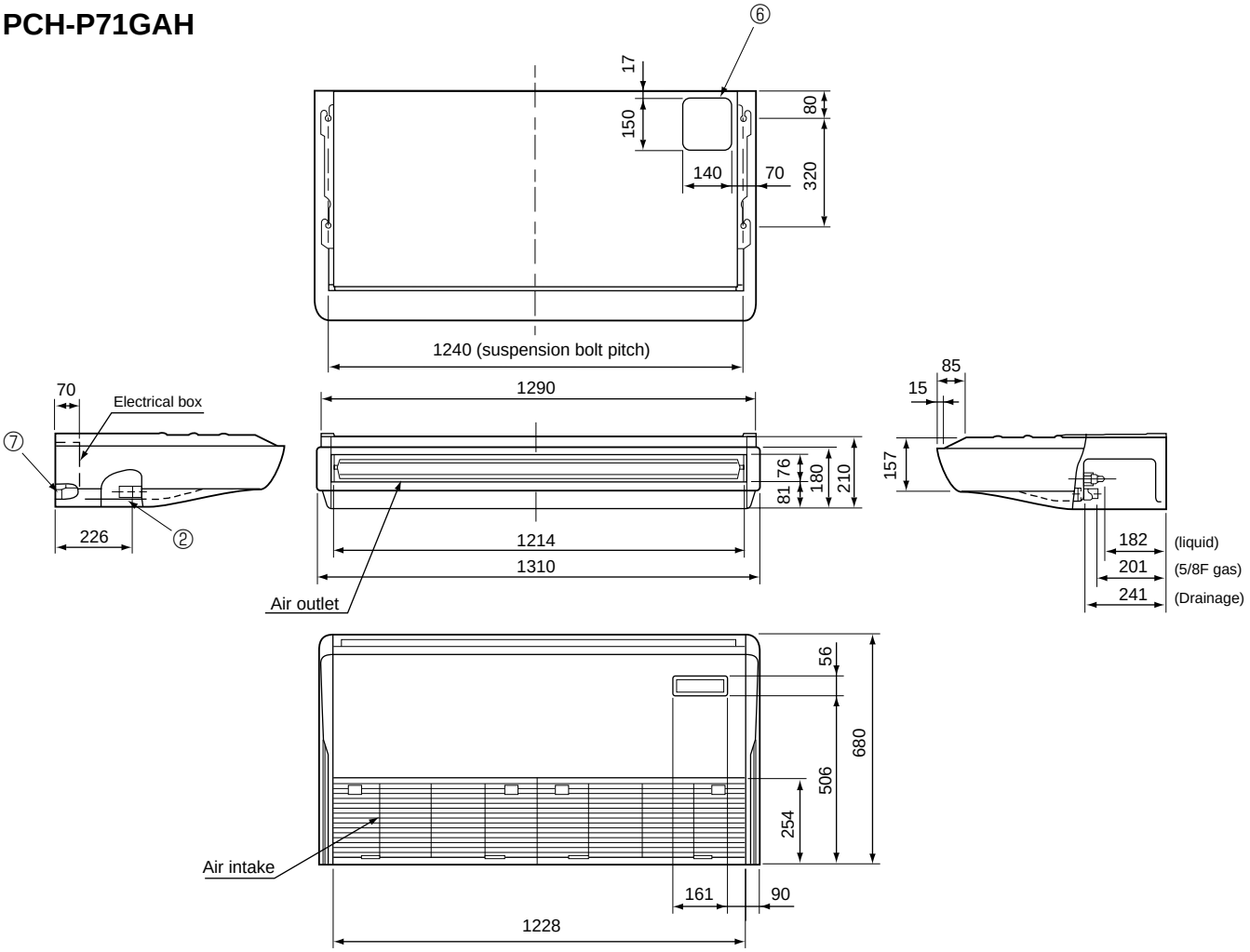

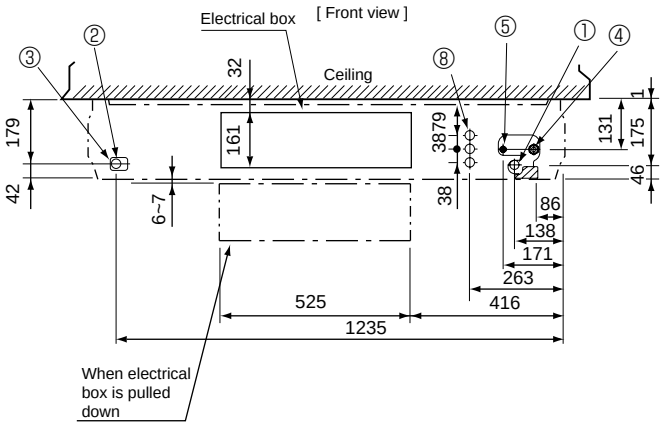

① Drainage pipe connection (26mm I.D.)
② Drainage pipe connection (for the left arrangement)
③ Knockout hole for left drain-piping arrangement
④ Refrigerant-pipe connection (gas pipe side/flared connection)
⑤ Refrigerant-pipe connection (liquid pipe side/flared connection)
⑥ Knockout hole for upper drain pipe arrangement
⑦ Knockout hole for left drain pipe arrangement
⑧ Knockout hole for wiring arrangement

Use the current nuts meeting the pipe size of the outdoor unit.

Available pipe size

	RP50	RP60	RP71,P60,P71
⑤ LIQUID SIDE	ϕ6.35 ○	ϕ6.35	—
	ϕ9.52	ϕ9.52 ○	ϕ9.52 ○
④ GAS SIDE	ϕ12.7 ○	—	—
	ϕ15.88	ϕ15.88 ○	ϕ15.88 ○
	—	—	—

○ : Initial flare nut size

PCA-RP100GA
PCA-RP100GA#1
PCH-P100GAH

Unit : mm

NOTES:
1. Use M10 or W3/8 screws for anchor bolt.
2. When optional drain lift-up mechanism is installed, always provide upward piping for refrigerant piping.

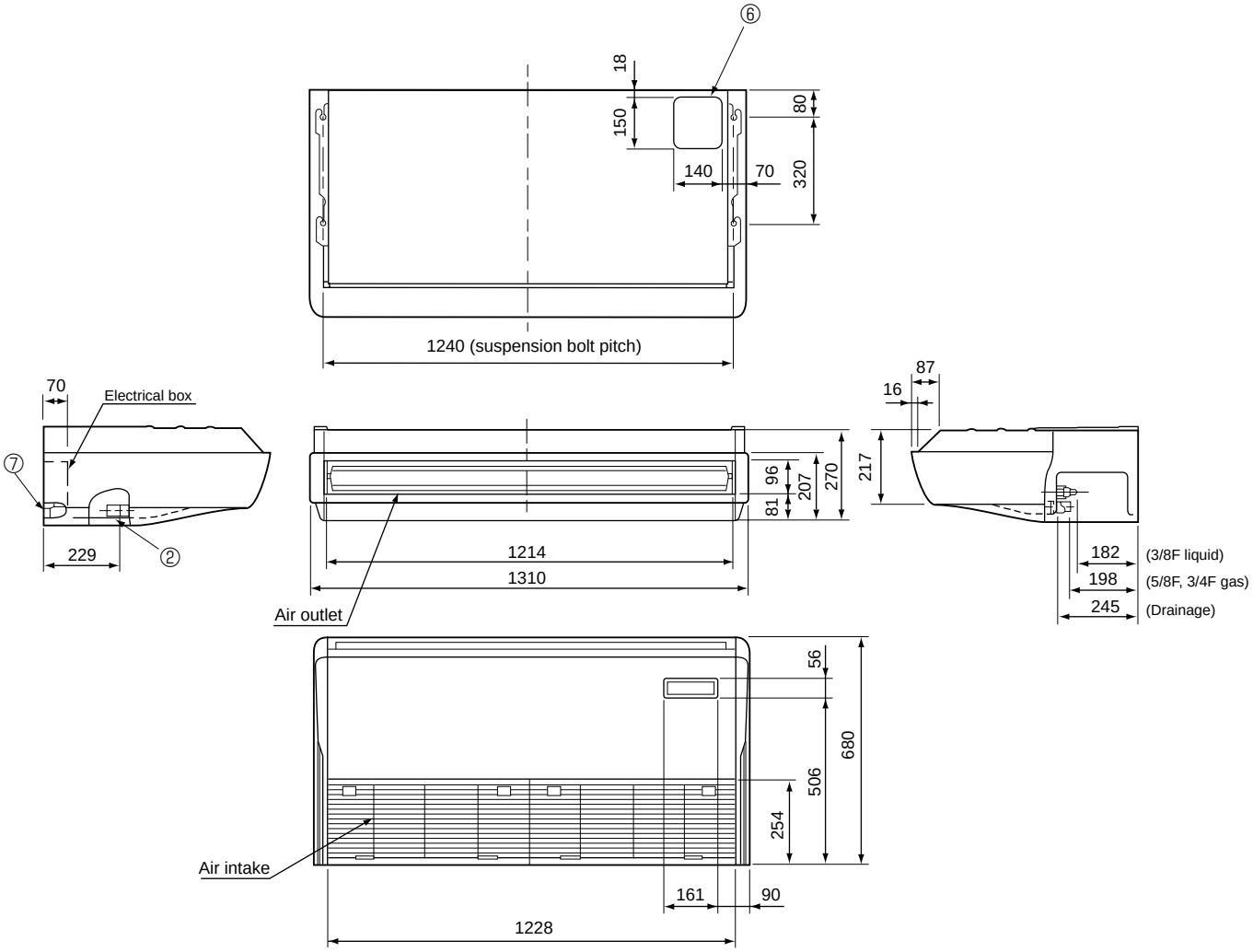

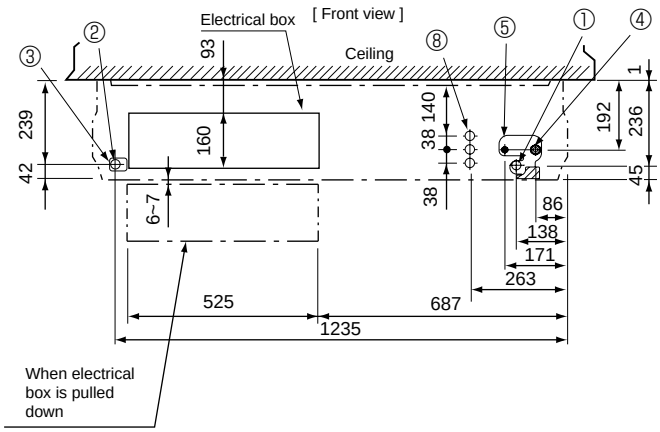

① Drainage pipe connection (26mm I.D.)
② Drainage pipe connection (for the left arrangement)
③ Knockout hole for left drain-piping arrangement
④ Refrigerant-pipe connection (gas pipe side/flared connection)
⑤ Refrigerant-pipe connection (liquid pipe side/flared connection)
⑥ Knockout hole for upper drain pipe arrangement
⑦ Knockout hole for left drain pipe arrangement
⑧ Knockout hole for wiring arrangement

Use the current nuts meeting the pipe size of the outdoor unit.

Available pipe size

	RP100	P100
⑤ LIQUID SIDE	—	—
	ϕ9.52 ○	ϕ9.52 ○
④ GAS SIDE	—	—
	ϕ15.88 ○	—
	ϕ19.05	ϕ19.05 ○

○ :Initial flare nut size

PCA-RP125GA
PCA-RP140GA
PCA-RP125GA#1
PCA-RP140GA#1
PCH-P125GAH
PCH-P140GAH

Unit : mm

NOTES:
1. Use M10 or W3/8 screws for anchor bolt.
2. When optional drain lift-up mechanism is installed, always provide upward piping for refrigerant piping.

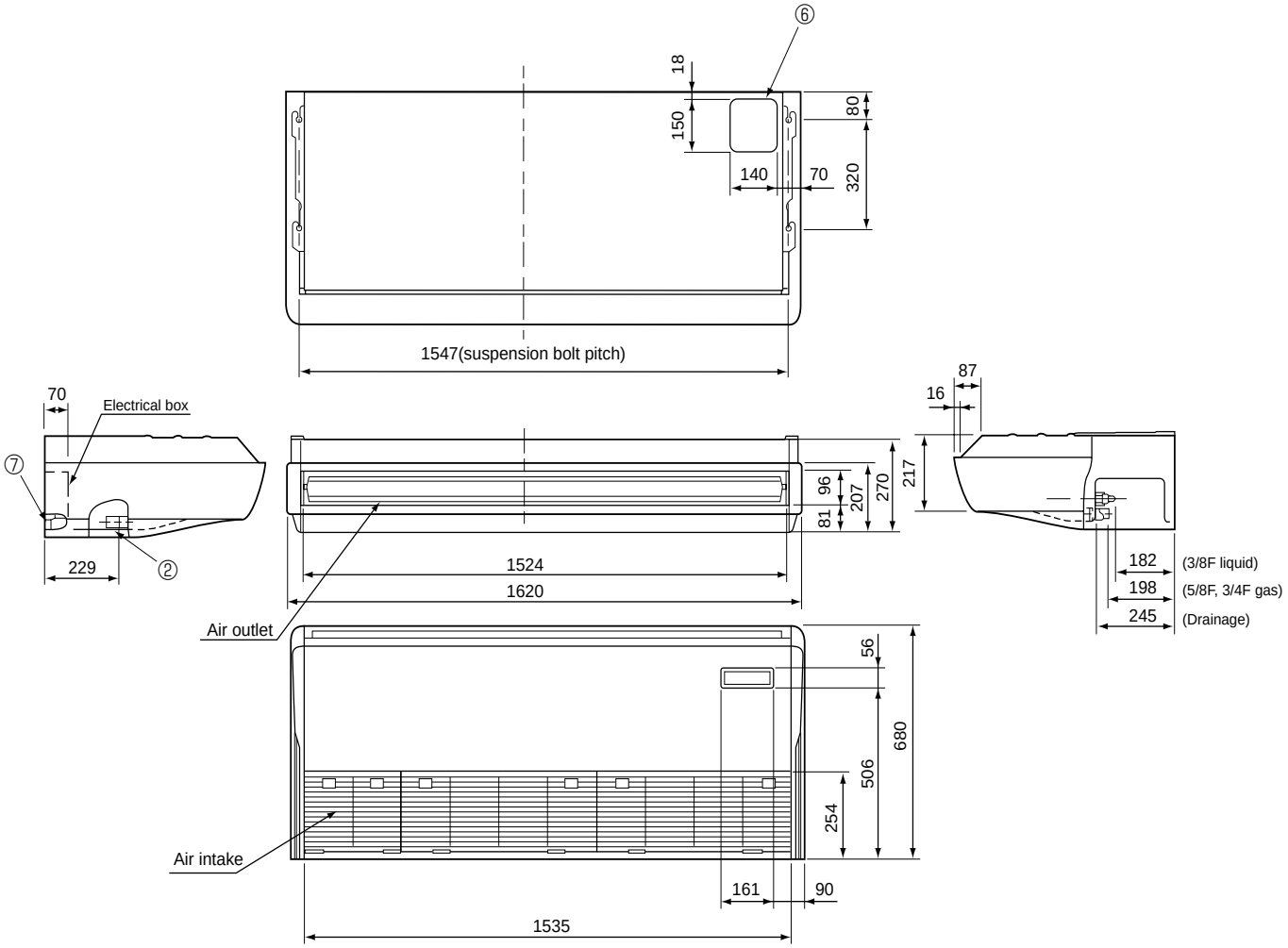

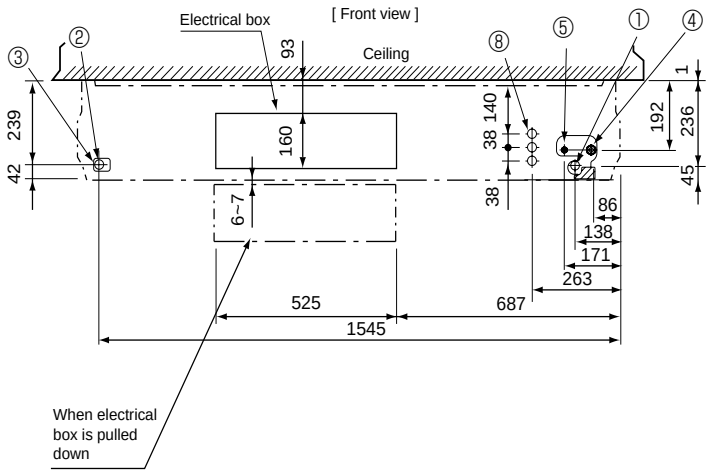

① Drainage pipe connection (26mm I.D.)
② Drainage pipe connection (for the left arrangement)
③ Knockout hole for left drain-piping arrangement
④ Refrigerant-pipe connection (gas pipe side/flared connection)
⑤ Refrigerant-pipe connection (liquid pipe side/flared connection)
⑥ Knockout hole for upper drain pipe arrangement
⑦ Knockout hole for left drain pipe arrangement
⑧ Knockout hole for wiring arrangement

Use the current nuts meeting the pipe size of the outdoor unit.

Available pipe size

	RP125,140	P125,140
⑤ LIQUID SIDE	—	—
	ϕ9.52 ○	ϕ9.52 ○
④ GAS SIDE	—	—
	ϕ15.88○	—
	ϕ19.05	ϕ19.05○

○ :Initial flare nut size

8 WIRING DIAGRAM

PCA-RP50GA PCA-RP50GA2 PCA-RP60GA
PCA-RP71GA PCA-RP100GA PCA-RP125GA PCA-RP140GA
PCA-RP50GA#1 PCA-RP50GA2#1 PCA-RP60GA#1
PCA-RP71GA#1 PCA-RP100GA#1 PCA-RP125GA#1 PCA-RP140GA#1
PCH-P50GAH PCH-P60GAH PCH-P71GAH
PCH-P100GAH PCH-P125GAH PCH-P140GAH

SYMBOL		NAME
P.B		INDOOR POWER BOARD
I.B		INDOOR CONTROLLER BOARD
	FUSE	FUSE (T6.3AL250V)
	ZNR	VARISTOR
	CN2L	CONNECTOR(LOSSNAY)
	CN32	CONNECTOR(REMOTE SWITCH)
	CN41	CONNECTOR(HA TERMINAL-A)
	CN51	CONNECTOR(CENTRALLY CONTROL)
	SW1	SWITCH (MODEL SELECTION) ※See Table 1.
	SW2	SWITCH (CAPACITY CODE) ※See Table 2.
	SWE	SWITCH(EMERGENCY OPERATION)
	X1	RELAY(DRAIN PUMP)
	X4	RELAY(FAN MOTOR)
	BCR	FAN CONTROL ELEMENT
	LED1	POWER SUPPLY(I.B)
	LED2	POWER SUPPLY(R.B)
	LED3	TRANSMISSION(INDOOR-OUTDOOR)
C		CAPACITOR(FAN MOTOR)

SYMBOL	NAME
MF	FAN MOTOR
MV	VANE MOTOR
DP	DRAIN-UP MACHINE (OPTION)
DS	DRAIN SENSOR (OPTION)
TB2	TERMINAL BLOCK (HEATER) ※PCH-P.GAH models only or option for PCA RP.GA(2) models.
TB4	TERMINAL BLOCK(INDOOR/OUTDOOR CONNECTING LINE)
TB5,TB6	TERMINAL BLOCK(REMOTE CONTROLLER TRANSMISSION LINE)
TH1	ROOM TEMP.THERMISTOR (0℃/15kΩ, 25℃/5.4kΩ DETECT)
TH2	PIPE TEMP.THERMISTOR/LIQUID (0℃/15kΩ, 25℃/5.4kΩ DETECT)
TH5	COND./EVA.TEMP.THERMISTOR (0℃/15kΩ, 25℃/5.4kΩ DETECT)
R.B	WIRED REMOTE CONTROLLER BOARD

SYMBOL		NAME
W.B		WIRELESS REMOTE CONTROLLER BOARD(OPTION)
	RU	RECEIVING UNIT
	BZ	BUZZER
	LED1	LED(RUN INDICATOR)
	LED2	LED(HOT ADJUST)
	SW1	SWITCH(HEATING ON/OFF)
	SW2	SWITCH(COOLING ON/OFF)
HEATER		
	FS1,2	THERMAL FUSE(98℃10A:50GAH/117℃16A:100GAH 110℃16A:60,71,125,140GAH)
	H1	HEATER
	26H	HEATER THERMAL SWITCH
	88H	HEATER CONTACTOR

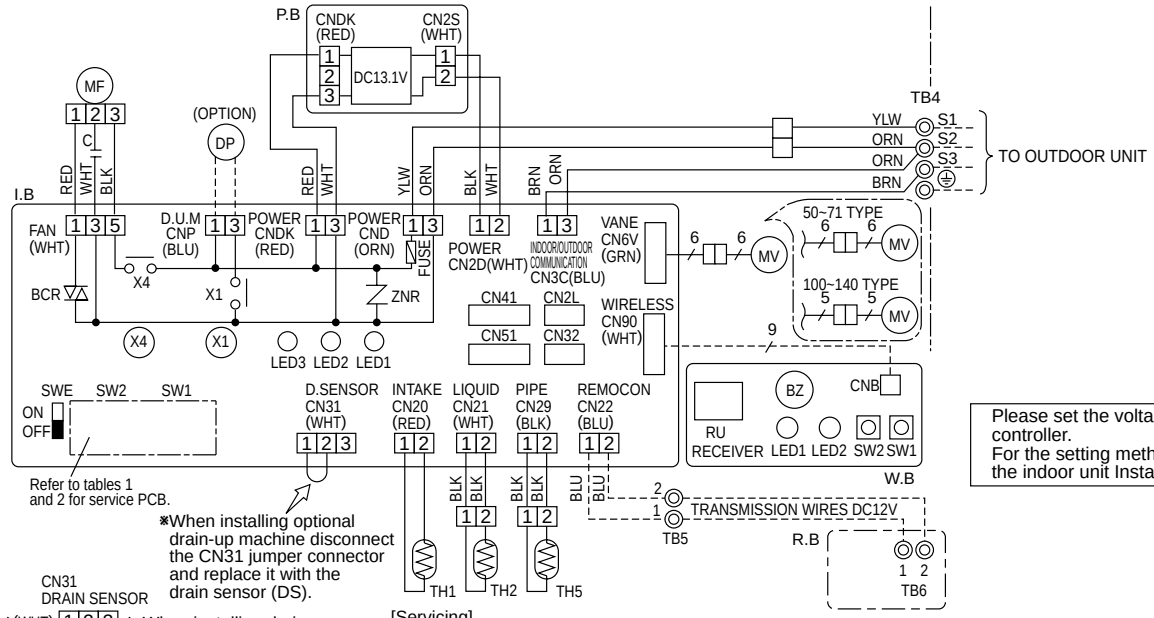

Please set the voltage using the remote controller.
For the setting method, please refer to the indoor unit Installation Manual.

[Servicing]
Fasten terminal of the terminal board "TB4"equips lock system.
To remove the fastened terminal, pull it while pressing the protruding portion (locking lever) of the terminal. The fastened terminal protruding portion should face upward.

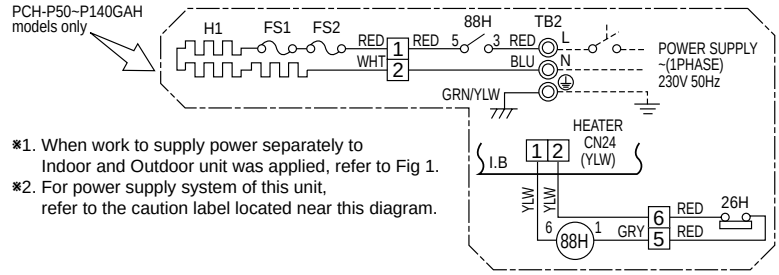

※1. When work to supply power separately to Indoor and Outdoor unit was applied, refer to Fig 1.
※2. For power supply system of this unit, refer to the caution label located near this diagram.

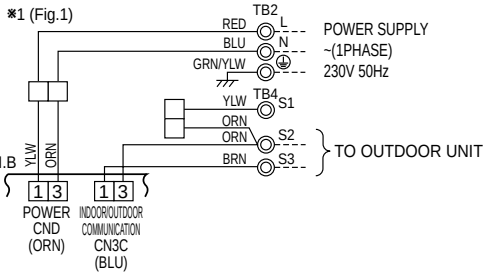

Table 1

SW1	
MODELS	Service board
PCA-RP.GA PCH-P.GAH	1 2 3 4 5 ON OFF

Table 2

SW2			
MODELS	Service board	MODELS	Service board
PCA-RP50GA PCH-P50GAH	1 2 3 4 5 ON OFF	PCA-RP100GA PCH-P100GAH	1 2 3 4 5 ON OFF
PCA-RP50GA2 PCA-RP60GA PCH-P60GAH	1 2 3 4 5 ON OFF	PCA-RP125GA PCH-P125GAH	1 2 3 4 5 ON OFF
PCA-RP71GA PCH-P71GAH	1 2 3 4 5 ON OFF	PCA-RP140GA PCH-P140GAH	1 2 3 4 5 ON OFF

NOTES:
1. Since the outdoor side electric wiring may change be sure to check the outdoor unit electric wiring for servicing.
2. Indoor and outdoor connecting wires are made with polarities, make wiring matching terminal numbers (S1, S2, S3).
3. Make sure that the main power supply of the booster heater is independent.
4. Symbols used in wiring diagram above are, □□□ : Connector, ◎: Terminal (block).

9 REFRIGERANT SYSTEM DIAGRAM

Unit : mm

PCA-RP50GA	**PCA-RP50GA2**	**PCA-RP60GA**	
PCA-RP71GA	**PCA-RP100GA**	**PCA-RP125GA**	**PCA-RP140GA**
PCA-RP50GA#1	**PCA-RP50GA2#1**	**PCA-RP60GA#1**	
PCA-RP71GA#1	**PCA-RP100GA#1**	**PCA-RP125GA#1**	**PCA-RP140GA#1**
PCH-P50GAH	**PCH-P60GAH**	**PCH-P71GAH**	
PCH-P100GAH	**PCH-P125GAH**	**PCH-P140GAH**	

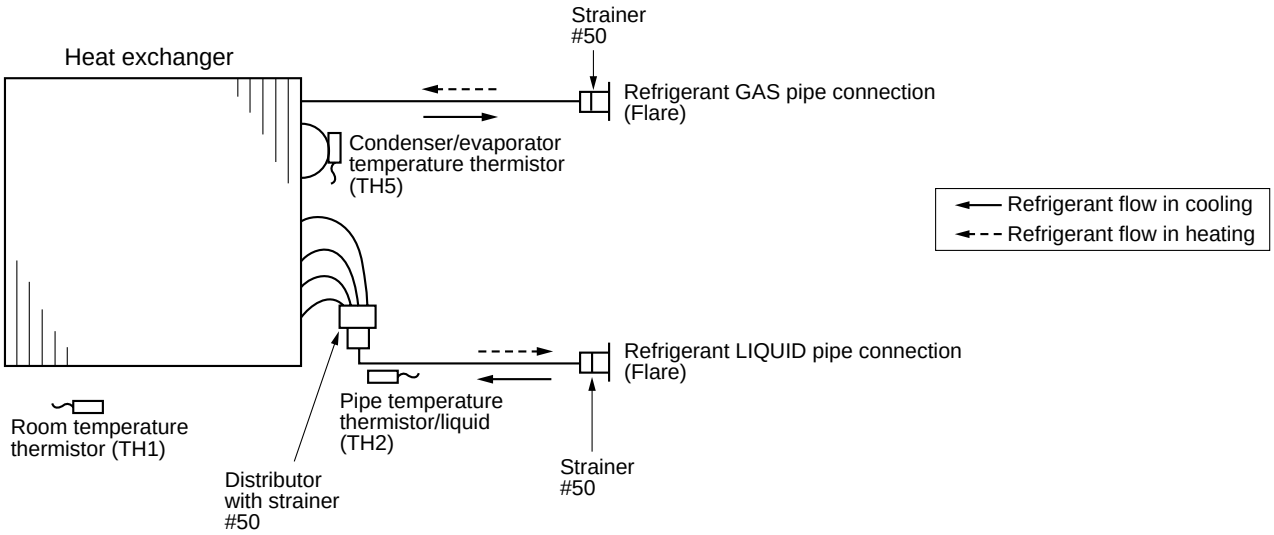

10 TROUBLESHOOTING

10-1. TROUBLESHOOTING

<Error code display by self-diagnosis and actions to be taken for service (summary)>

Present and past error codes are logged and displayed on the wired remote controller or controller board of outdoor unit. Actions to be taken for service and the trouble reoccurrence at field are summarized in the table below. Check the contents below before investigating details.

Unit conditions at service	Error code	Actions to be taken for service (summary)
The trouble is reoccurring.	Displayed	Judge what is wrong and take a corrective action according to “SELF-DIAGNOSIS ACTION TABLE” (10-2).
	Not displayed	Conduct troubleshooting and ascertain the cause of the trouble according to “TROUBLESHOOTING BY INFERIOR PHENOMENA ” (10-3).
The trouble is not reoccurring.	Logged	①Consider the temporary defects such as the work of protection devices in the refrigerant circuit including compressor, poor connection of wiring, noise and etc. Re-check the symptom, and check the installation environment, refrigerant amount, weather when the trouble occurred, and wiring related. ②Reset error code logs and restart the unit after finishing service. ③There is no abnormality in electrical components, controller boards, and remote controller.
	Not logged	①Recheck the abnormal symptom. ②Identify the cause of the trouble and take a corrective action according to “TROUBLESHOOTING BY INFERIOR PHENOMENA ” (10-3). ③Continue to operate unit for the time being if the cause is not ascertained. ④There is no abnormality in electrical components, controller boards, remote controller etc.

10-2. SELF-DIAGNOSIS ACTION TABLE

Note: Refer to the manual of outdoor unit for the details of display such as F, U, and other E.

Error Code	Abnormal point and detection method	Cause	Countermeasure
P1	**Room temperature thermistor (TH1)** ① The unit is in 3-minute resume prevention mode if short/open of thermistor is detected. Abnormal if the unit does not reset normally after 3 minutes. (The unit returns to normal operation, if it has been reset normally.) ② Constantly detected during cooling, drying, and heating operation. Short: -90℃ or more Open: -40℃ or less	① Defective thermistor characteristics ② Contact failure of connector (CN20) on the indoor controller board (Insert failure) ③ Breaking of wire or contact failure of thermistor wiring ④ Defective indoor controller board	①–③ Check resistance value of thermistor. 0℃ 15.0kΩ 10℃ 9.6kΩ 20℃ 6.3kΩ 30℃ 4.3kΩ 40℃ 3.0kΩ If you put force on (draw or bend) the lead wire with measuring resistance value of thermistor, breaking of wire or contact failure can be detected. ② Check contact failure of connector (CN20) on the indoor controller board. Refer to 10-6. Turn the power on again and check restart after inserting connector again. ④ Check room temperature display on remote controller. Replace indoor controller board if there is abnormal difference with actual room temperature. Turn the power off, and on again to operate after check.
P2	**Pipe temperature thermistor/Liquid (TH2)** ① The unit is in 3-minute resume prevention mode if short/open of thermistor is detected. Abnormal if the unit does not reset normally after 3 minutes. (The unit returns to normal operation, if it has been reset normally.) ② Constantly detected during cooling, drying, and heating (except defrosting) operation Short: 90℃ or more Open: -40℃ or less	① Defective thermistor characteristics ② Contact failure of connector (CN44) on the indoor controller board (Insert failure) ③ Breaking of wire or contact failure of thermistor wiring ④ Defective refrigerant circuit is causing thermistor temperature of 90℃ or more or -40℃ or less. ⑤ Defective indoor controller board	①–③ Check resistance value of thermistor. For characteristics, refer to (P1) above. ② Check contact failure of connector (CN44) on the indoor controller board. Refer to 10-6. Turn the power on and check restart after inserting connector again. ④ Check pipe <liquid> temperature with remote controller in test run mode. If pipe <liquid> temperature is extremely low (in cooling mode) or high (in heating mode), refrigerant circuit may have defective. ⑤ Check pipe <liquid> temperature with remote controller in test run mode. If there is extremely difference with actual pipe <liquid> temperature, replace indoor controller board. Turn the power off, and on again to operate after check.
P4	**Drain sensor (DS)** ① Suspensive abnormality, if short/open of thermistor is detected for 30 seconds continuously.Compressor and indoor fan will be turned off ② Short/open is detected for 30 seconds continuously during suspensive abnormality. (The unit returns to normal operation, if it has normally reset.) ③ Detect the following condition. • During cooling and drying operation. • In case that pipe <liquid> temperature - room temperature <-10deg (Except defrosting) • When pipe <liquid> temperature or room temperature is short/open temperature. • During drain pomp operation.	① Defective thermistor characteristics ② Contact failure of connector (CN31) on the indoor controller board. (Insert failure). ③ Breaking of wire or contact failure of drain sensor wiring. ④ Defective indoor controller board.	①–③ Check resistance value of thermistor. 0℃·····6.0kΩ 10℃····3.9kΩ 20℃····2.6kΩ 30℃····1.8kΩ 40℃····1.3kΩ ② Check contact failure of connector (CN31) on the indoor controller board. Refer to 10-6. Turn the power on again and check restart after inserting connector again. ④ Replace indoor controller board if drain pump operates with the line of drain sensor connector CN31-① and ② is short-circuited, and abnormality reappears. Turn the power off, and on again to operate after check.
P5	**Malfunction of drain pump (DP)** ① Suspensive abnormality, if thermistor of drain sensor is let heat itself and temperature rises slightly. Compressor and indoor fan will be turned off. ② Drain pomp is abnormal if the condition above is detected during suspensive abnormality. ③ Constantly detected during drain pump operation.	① Malfunction of drain pump ② Defective drain Clogged drain pump Clogged drain pipe ③ Attached drop of water at the drain sensor • Drops of drain trickles from lead wire. • Clogged filter is causing wave of drain. ④ Defective indoor controller board.	① Check if drain-up machine works. ② Check drain function. ③ Check the setting of lead wire of drain sensor and check clogs of the filter. ④ Replace indoor controller board if drain pump operates with the line of drain sensor connector CN31-① and ② is short-circuited and abnormality reappears. Refer to 10-6. Turn the power off, and on again to operate after check.

Error Code	Abnormal point and detection method	Cause	Countermeasure
P6	**Freezing/overheating protection is working** ① Freezing protection (Cooling mode) The unit is in 6-minute resume prevention mode if pipe <liquid or condenser/ evaporator> temperature stays under -15℃ for 3 minutes, 3 minutes after the compressor started. Abnormal if it stays under -15℃ for 3 minutes again within 16 minutes after 6-minute resume prevention mode. ② Overheating protection (Heating mode) The units is in 6 minute resume prevention mode if pipe <condenser / evaporator> temperature is detected as over 70℃ after the compressor started. Abnormal if the temperature of over 70℃ is detected again within 30 minutes after 6 minute resume prevention mode.	(Cooling or drying mode) ① Clogged filter (reduced airflow) ② Short cycle of air path ③ Low-load (low temperature) operation out of the tolerance range ④ Defective indoor fan motor • Fan motor is defective. • Indoor controller board is defective. ⑤ Defective outdoor fan control ⑥ Overcharge of refrigerant ⑦ Defective refrigerant circuit (clogs) (Heating mode) ① Clogged filter (reduced airflow) ② Short cycle of air path ③ Over-load (high temperature) operation out of the tolerance range ④ Defective indoor fan motor • Fan motor is defective. • Indoor controller board is defective. ⑤ Defective outdoor fan control ⑥ Overcharge of refrigerant ⑦ Defective refrigerant circuit (clogs) ⑧ Bypass circuit of outdoor unit is defective.	(Cooling or drying mode) ① Check clogs of the filter. ② Remove shields. ④ Refer to 10-6. ⑤ Check outdoor fan motor. ⑥⑦ Check operating condition of refrigerant circuit. (Heating mode) ① Check clogs of the filter. ② Remove shields. ④ Refer to 10-6. ⑤ Check outdoor fan motor. ⑥~⑧Check operating condition of refrigerant circuit.
P8	**Pipe temperature** <Cooling mode> Detected as abnormal when the pipe temperature is not in the cooling range 3 minutes after compressor start and 6 minutes after the liquid or condenser/evaporator pipe is out of cooling range. Note 1) It takes at least 9 minutes to detect. Note 2) Abnormality P8 is not detected in drying mode. Cooling range : -3 °C ≧ (TH-TH1) TH: Lower temperature between: liquid pipe temperature (TH2) and condenser/evaporator temperature (TH5) TH1: Intake temperature <Heating mode> When 10 seconds have passed after the compressor starts operation and the hot adjustment mode has finished, the unit is detected as abnormal when condenser/ evaporator pipe temperature is not in heating range within 20 minutes. Note 3) It takes at least 27 minutes to detect abnormality. Note 4) It excludes the period of defrosting. (Detection restarts when defrosting mode is over.) Heating range : 3 °C ≦ (TH5-TH1)	① Slight temperature difference between indoor room temperature and pipe <liquid or condenser / evaporator> temperature thermistor • Shortage of refrigerant • Disconnected holder of pipe <liquid or condenser / evaporator> thermistor • Defective refrigerant circuit ② Converse connection of extension pipe (on plural units connection) ③ Converse wiring of indoor/ outdoor unit connecting wire (on plural units connection) ④ Defective detection of indoor room temperature and pipe <condenser / evaporator> temperature thermistor ⑤ Stop valve is not opened completely.	①~④ Check pipe <liquid or condenser / evaporator> temperature with room temperature display on remote controller and outdoor controller circuit board. Pipe <liquid or condenser / evaporator> temperature display is indicated by setting SW2 of outdoor controller circuit board as follows. (Conduct temperature check with outdoor controller circuit board after connecting 'A-Control Service Tool(PAC-SK52ST)'.) ②③Check converse connection of extension pipe or converse wiring of indoor/outdoor unit connecting wire.

Error Code	Abnormal point and detection method	Cause	Countermeasure
P9	**Pipe temperature thermistor / Condenser-Evaporator (TH5)** ① The unit is in 3-minute resume protection mode if short/open of thermistor is detected. Abnormal if the unit does not get back to normal within 3 minutes. (The unit returns to normal operation, if it has been reset normally.) ② Constantly detected during cooling, drying, and heating operation (except defrosting) Short: 90℃ or more Open: -40℃ or less	① Defective thermistor characteristics ② Contact failure of connector (CN44) on the indoor controller board (Insert failure) ③ Breaking of wire or contact failure of thermistor wiring ④ Temperature of thermistor is 90℃ or more or -40℃ or less caused by defective refrigerant circuit. ⑤ Defective indoor controller board	①–③ Check resistance value of thermistor. For characteristics, refer to (P1) above. ② Check contact failure of connector (CN44) on the indoor controller board. Refer to 10-7. Turn the power on and check restart after inserting connector again. ④ Operate in test run mode and check pipe <condenser / evaporator> temperature with outdoor controller circuit board. If pipe <condenser / evaporator> temperature is extremely low (in cooling mode) or high (in heating mode), refrigerant circuit may have defect. ⑤ Operate in test run mode and check pipe <condenser / evaporator> temperature with outdoor control circuit board. If there is extreme difference with actual pipe <condenser / evaporator> temperature, replace indoor controller board. There is no abnormality if none of above comes within the unit. Turn the power off and on again to operate. (In case of checking pipe temperature with outdoor controller circuit board, be sure to connect A-control service tool (PAC-SK52ST).)
E0 or E4	**Remote controller transmission error(E0)/signal receiving error(E4)** ① Abnormal if main or sub remote controller cannot receive any transmission normally from indoor unit of refrigerant address “0” for 3 minutes. (Error code : E0) ② Abnormal if sub remote controller could not receive any signal for 2 minutes. (Error code: E0) ① Abnormal if indoor controller board can not receive any data normally from remote controller board or from other indoor controller board for 3 minutes. (Error code: E4) ② Indoor controller board cannot receive any signal from remote controller for 2 minutes. (Error code: E4)	① Contact failure at transmission wire of remote controller ② All remote controllers are set as “sub” remote controller. In this case, E0 is displayed on remote controller, and E4 is displayed at LED (LED1, LED2) on the outdoor controller circuit board. ③ Miswiring of remote controller ④ Defective transmitting receiving circuit of remote controller ⑤ Defective transmitting receiving circuit of indoor controller board of refrigerant addresses “0”. ⑥ Noise has entered into the transmission wire of remote controller.	① Check disconnection or looseness of indoor unit or transmission wire of remote controller. ② Set one of the remote controllers “main” if there is no problem with the action above. ③ Check wiring of remote controller. • Total wiring length: max. 500m (Do not use cable x 3 or more.) • The number of connecting indoor units: max. 16 units • The number of connecting remote controller: max. 2 units When it is not the above-mentioned problem of ①~③ ④ Diagnose remote controllers. a) When “RC OK” is displayed, Remote controllers have no problem. Turn the power off, and on again to check. If abnormality generates again, replace indoor controller board. b) When “RC NG” is displayed, Replace remote controller. c)When “RC E3” or “ERC 00-66” is displayed, noise may be causing abnormality. * If the unit is not normal after replacing indoor controller board in group control, indoor controller board of address “0” may be abnormal.
E3 or E5	**Remote controller transmission error(E3)/signal receiving error(E5)** ① Abnormal if remote controller could not find blank of transmission path for 6 seconds and could not transmit. (Error code: E3) ② Remote controller receives transmitted data at the same time and compares the received and transmitted data. Abnormal if these data are judged to be different 30 continuous times. (Error code: E3) ① Abnormal if indoor controller board could not find blank of transmission path. (Error code: E5) ② Indoor controller board receives transmitted data at the same time and compares the received and transmitted data. Abnormal if these data are judged to be different 30 continuous times. (Error code: E5)	① 2 remote controllers are set as “main.” (In case of 2 remote controllers) ② Remote controller is connected with 2 indoor units or more. ③ Repetition of refrigerant address ④ Defective transmitting receiving circuit of remote controller ⑤ Defective transmitting receiving circuit of indoor controller board ⑥ Noise has entered into transmission wire of remote controller.	① Set a remote controller to main, and the other to sub. ② Remote controller is connected with only one indoor unit. ③ The address changes to a separate setting. ④~⑥ Diagnose remote controller. a) When “RC OK” is displayed, remote controllers have no problem. Turn the power off,and on again to check. When becoming abnormal again, replace indoor controller board. b)When “RC NG” is displayed, replace remote controller. c)When “RC E3” or “ERC 00-66” is displayed, noise may be causing abnormality.

Error Code	Abnormal point and detection method	Cause	Countermeasure
E6	**Indoor/outdoor unit communication error (Signal receiving error)** ① Abnormal if indoor controller board cannot receive any signal normally for 6 minutes after turning the power on. ② Abnormal if indoor controller board cannot receive any signal normally for 3 minutes. ③ Consider the unit abnormal under the following condition: When 2 or more indoor units are connected to an outdoor unit, indoor controller board cannot receive a signal for 3 minutes from outdoor controller circuit board, a signal which allows outdoor controller circuit board to transmit signals.	① Contact failure, short circuit or, miswiring (converse wiring) of indoor/outdoor unit connecting wire ② Defective transmitting receiving circuit of indoor controller board ③ Defective transmitting receiving circuit of indoor controller board ④ Noise has entered into indoor/ outdoor unit connecting wire.	* Check LED display on the outdoor control circuit board. (Connect A-control service tool, PAC-SK52ST.) Refer to outdoor unit service manual. ① Check disconnection or looseness of indoor/ outdoor unit connecting wire of indoor unit or outdoor unit. Check all the units in case of twin triple indoor unit system. ②-④ Turn the power off, and on again to check. If abnormality generates again, replace indoor controller board or outdoor controller circuit board. * Other indoor controller board may have defect in case of twin triple indoor unit system.
E7	**Indoor/outdoor unit communication error (Transmitting error)** Abnormal if “1” receiving is detected 30 times continuously though indoor controller board has transmitted “0”.	① Defective transmitting receiving circuit of indoor controller board ② Noise has entered into power supply. ③ Noise has entered into outdoor control wire.	①-③ Turn the power off, and on again to check. If abnormality generates again, replace indoor controller board.
Fb	**Indoor controller board** Abnormal if data cannot be read normally from the nonvolatile memory of the indoor controller board.	① Defective indoor controller board	① Replace indoor controller board.
E1 or E2	**Remote controller control board** ① Abnormal if data cannot be read normally from the nonvolatile memory of the remote controller control board. (Error code: E1) ② Abnormal if the clock function of remote controller cannot be operated normally. (Error code: E2)	① Defective remote controller	① Replace remote controller.
PA	**Forced compressor stop (due to water leakage abnormality)** ① When the intake temperature subtracted with liquid pipe temperature is less than -10℃, drain sensor is detected whether it is soaked in the water or not at the interval of 90 seconds. (Drain pump will start operating when the drain sensor is detected to be soaked in the water.) ② The unit has a water leakage abnormality when the following conditions, a and b, are satisfied while the above-mentioned detection is performed. a) The drain sensor is detected to be soaked in the water 10 times in a row. b) The intake temperature subtracted with liquid pipe temperature is detected to be less than -10℃ for a total of 30 minutes. (When the drain sensor is detected to be NOT soaked in the water, the detection record of a and b will be cleared.) ③ The drain sensor detection is performed in operations other than cooling. (When the unit stops operating, during heating or fan operation, when the unit stops because of some abnormality) *Once the water leakage abnormality is detected, abnormality state will not be released until the main power is reset.	① Drain pump trouble ② Drain defective · Drain pump clogging · Drain pipe clogging ③ Open circuit of drain sensor side heater ④ Contact failure of drain sensor connector ⑤ Dew condensation on drain sensor · Drain water descends along lead wire. · Drain water waving due to filter clogging. ⑥ Extension piping connection difference at twin, triple, quadruple system. ⑦ Mis-wiring of indoor/ outdoor connecting at twin, triple, quadruple system. ⑧ Room temperature thermistor / liquid pipe temperature thermistor detection is defective.	① Check the drain pump. ② Please confirm whether water can be drained. ③ Confirm the resistance of the drain sensor. ④ Check the connector contact failure. ⑤ Check the drain sensor leadwire mounted. Check the filter clogging ⑥ Check the piping connection. ⑦ Check the indoor/ outdoor connecting wires. ⑧ Check the room temperature display of remote controller. Check the indoor liquid pipe temperature display of outdoor controller board.

10-3. TROUBLESHOOTING BY INFERIOR PHENOMENA

Note: Refer to the manual of outdoor unit for the detail of remote controller.

Phenomena	Cause	Countermeasure
(1)LED2 on indoor controller board is off.	• When LED1 on indoor controller board is also off. ① Power supply of rated voltage is not supplied to outdoor unit.	① Check the voltage of outdoor power supply terminal block (L, N) or (L3, N). • When AC 220~240V is not detected. Check the power wiring to outdoor unit and the breaker. • When AC 220~240V is detected. —Check ② (below).
	② Defective outdoor controller circuit board.	② Check the voltage between outdoor terminal block S1 and S2. • When AC 220~240V is not detected. Check the fuse on outdoor controller circuit board. Check the wiring connection. • When AC 220~240V is detected. —Check ③ (below).
	③ Power supply of 220~240V is not supplied to indoor unit.	③ Check the voltage between indoor terminal block S1 and S2. • When AC 220~240V is not detected. Check indoor/outdoor unit connecting wire for mis-wiring. • When AC 220~240V is detected. —Check ④ (below).
	④ Defective indoor power board.	④ Check voltage output from CN2S on indoor power board (DC13.1V). Refer to 10-6-1. • When no voltage is output. Check the wiring connection. • When output voltage is between DC12.5V and DC13.7V. —Check ⑤ (below).
	⑤ Defective indoor controller board.	⑤ Check the wiring connection between indoor controller board and indoor power board. Check the fuse on indoor controller board.
	(For the separate indoor/outdoor unit power supply system) ① Power supply of 220~240V AC is not supplied to indoor unit.	① Check the voltage of indoor power supply terminal block (L,N). • When AC220~240V is not detected. Check the power supply wiring. • When AC220~240V is detected. -Check ② (below).
	② The connectors of the optional replacement kit are not used.	② Check that there is no problem in the method of connecting the connectors. • When there are problems in the method of connecting the connectors. Connect the connector correctly referring to installation manual of an optional kit. • When there is no problem in the method of connecting the connectors. -Check ③ (below).
	③ Defective indoor controller board.	③ Check voltage output from CNDK on indoor controller board. • When AC220~240V is not detected. Check the fuse on indoor controller board. Check the wiring connection between indoor power supply terminal block and CND on indoor controller board. • When AC220~240V is detected. -Check ④ (below).
	④ Defective indoor power board.	④ Check voltage output from CN2S on indoor power board. • When no voltage output. Check the wiring connection between CNDK on indoor controller board and CNSK on indoor power board. If no problem are found,indoor power board is defective. • When DC12.5~13.7V is detected. Check the wiring connection between CN2S on indoor power board and CN2D on indoor power board. If no problem are found,indoor controller
	• When LED1 on indoor controller board is lit. ① Mis-setting of refrigerant address for outdoor unit (There is no unit corresponding to refrigerant address “0”.)	① Reconfirm the setting of refrigerant address for outdoor unit Set the refrigerant address to “0”. (For grouping control system under which 2 or more outdoor units are connected, set one of the units to “0”.) Set refrigerant address using SW1 (3-6) on outdoor controller circuit board.

Note: Refer to the manual of outdoor unit for the detail of remote controller.

Phenomena	Cause	Countermeasure
(2)LED2 on indoor controller board is blinking.	• When LED1 on indoor controller board is also blinking. Connection failure of indoor/outdoor unit connecting wire	Check indoor/outdoor unit connecting wire for connection failure.
	• When LED1 is lit. ① Mis-wiring of remote controller wires Under twin triple indoor unit system, 2 or more indoor units are wired together. ② Refrigerant address for outdoor unit is wrong or not set. Under grouping control system, there are some units whose refrigerant address is 0. ③ Short-cut of remote controller wires ④ Defective remote controller	① Check the connection of remote controller wires in case of twin triple indoor unit system. When 2 or more indoor units are wired in one refrigerant system, connect remote controller wires to one of those units. ② Check the setting of refrigerant address in case of grouping control system. If there are some units whose refrigerant addresses are 0 in one group, set one of the units to 0 using SW1 (3-6) on outdoor controller circuit board. ③④ Remove remote controller wires and check LED2 on indoor controller board. • When LED2 is blinking, check the short-cut of remote controller wires. • When LED2 is lit, connect remote controller wires again and: if LED2 is blinking, remote controller is defective; if LED2 is lit, connection failure of remote controller terminal block etc. has returned to normal.
(3)Upward/downward vane performance failure	① The vane is not downward during defrosting and heat preparation and when the thermostat is OFF in HEAT mode. (Working of COOL protection function) ② Vane motor does not rotate. • Defective vane motor • Breaking of wire or connection failure of connector • Up/down vane setting is “No vanes”. ③ Upward/downward vane does not work. • The vane is set to fixed position.	① Normal operation (The vane is set to horizontal regardless of remote control.) ② Check ② (left). • Check the vane motor. (Refer to “How to check the parts”.) • Check for breaking of wire or connection failure of connector. • Check “Up/down vane setting”. (Unit function selection by remote controller). ③ Normal operation (Each connector on vane motor side is disconnected.)
(4)Receiver for wireless remote controller	① Weak batteries of wireless remote controller. ② Contact failure of connector (CNB) on wireless remote controller board. (Insert failure) ③ Contact failure of connector (CN90) on indoor controller board.(Insert failure) ④ Contact failure of connector between wireless remote controller board and indoor controller board.	① Replace batteries of wireless remote controller. ②~④ Check contact failure of each connector. If no problems are found of connector, replace indoor controller board. When the same trouble occurs even if indoor controller board is replaced, replace wireless remote controller board.

10-4. When wired remote controller or indoor unit micro computer troubles

1. If there is not any other wrong when trouble occurs, emergency operation starts as the indoor controller board switch (SWE) is set to ON.
   During the emergency operation the indoor unit is as follows;
   (1) Indoor fan high speed operation (2) Drain-up machine operation(Option)

2. When emergency operating for COOL or HEAT, setting of the switch (SWE) in the indoor controller board and outdoor unit emergency operation are necessary.

3. Check items and notices as the emergency operation
   (1) Emergency operation cannot be used as follows;
   - When the outdoor unit is something wrong.
   - When the indoor fan is something wrong.
   - When drain over flow protected operation is detected during self-diagnosis. (Error code : P5)

   (2) Emergency operation will be serial operation by the power supply ON/OFF.
   ON/OFF or temperature, etc. adjustment is not operated by the remote controller.
   (3) Do not operate for a long time as cold air is blown when the outdoor unit starts defrosting operation during heat emergency operation.
   (4) Cool emergency operation must be within 10 hours at most. It may cause heat exchanger frosting in the indoor unit.
   (5) After completing the emergency operation, return the switch setting, etc. in former state.
   (6) Since vane does not work at emergency operation, position the vane manually and slowly.

10-5. HOW TO CHECK THE PARTS

PCA-RP50/60/71/100/125/140GA
PCA-RP50/60/71/100/125/140GA#1
PCA-RP50GA2 PCA-RP50GA2#1
PCH-P50/60/71/100/125/140GAH

Parts name	Check points

Room temperature thermistor (TH1)
Pipe temperature thermistor (TH2)
Condenser/evaporator temperature thermistor (TH5)

Disconnect the connector then measure the resistance with a tester.
(At the ambient temperature 10℃~30℃)

Normal	Abnormal
4.3kΩ~9.6kΩ	Open or short

(Refer to the next pege for a detail.)

Fan motor

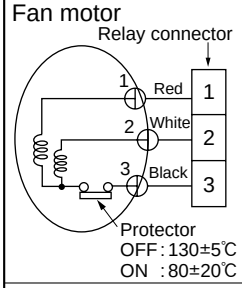

Measure the resistance between the terminals using a tester.
(Winding temperature 20℃)

Motor terminal or Relay connector	Normal				Abnormal
	50GA	50GA2 60, 71	100	125, 140	
Red–Black	70.6Ω	45.0Ω	43.7Ω	20.4Ω	Open or short
White–Black	69.6Ω	44.8Ω	55.3Ω	20.7Ω	

Vane motor

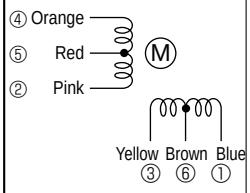

Connector	Normal		Abnormal
	50GA	50GA2, 60, 71	
Brown–Yellow	186~214Ω	140~160Ω	Open or short
Brown–Blue			
Red–Orange			
Red–Pink			

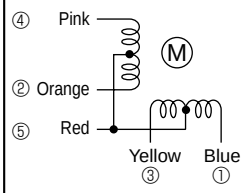

Connector	Normal	Abnormal
	100, 125, 140	
Red–Yellow	140~160Ω	Open or short
Red–Blue		
Red–Orange		
Red–Pink		

Heater (Only PCH)

Measure the resistance of each heater element with a tester.
(At the ambient temperature 20℃)

Normal				Abnormal
50	60, 71	100	125,140	
13.7Ω	9.1Ω	7.1Ω	6.4Ω	Open or short
0.467kW 80V	0.7kW 80V	0.9kW 80V	1.0kW 80V	

Drain-up mechanism (Option)

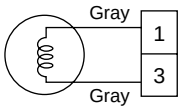

Measure the resistance between the terminals with a tester.
(Winding temperature 20℃)

Normal	Abnormal
195Ω	Open or short

Contactor (Only PCH)

Measure the resistance between the terminals with a tester.

Normal	Abnormal
50~140	Open or short
6 — 88H — 1 160Ω	

<Thermistor Characteristic graph>

Thermistor for lower temperature

Room temperature thermistor(TH1)
Pipe temperature thermistor(TH2)
Condenser/evaporator temperature thermistor(TH5)

Thermistor R_0=15k ± 3%
Fixed number of B=3480 ± 2%

$$Rt=15\exp\left\{3480\left(\frac{1}{273+t}-\frac{1}{273}\right)\right\}$$

0℃	15k
10℃	9.6k
20℃	6.3k
25℃	5.4k
30℃	4.3k
40℃	3.0k

< Thermistor for lower temperature >

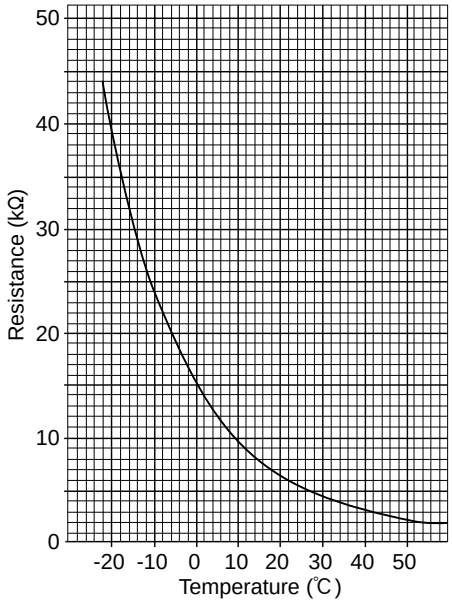

10-6.TEST POINT DIAGRAM

10-6-1. Power board

PCA-RP50GA	**PCA-RP50GA#1**	**PCA-RP50GAH**	**PCA-RP50GA2**	**PCA-RP50GA2#1**
PCA-RP60GA	**PCA-RP60GA#1**	**PCA-RP60GAH**		
PCA-RP71GA	**PCA-RP71GA#1**	**PCA-RP71GAH**		
PCA-RP100GA	**PCA-RP100GA#1**	**PCA-RP100GAH**		
PCA-RP125GA	**PCA-RP125GA#1**	**PCA-RP125GAH**		
PCA-RP140GA	**PCA-RP140GA#1**	**PCA-RP140GAH**		

CN2S
Connect to the indoor controller board (CN2D)
Between ① to ③ 12.6-13.7V DC (Pin① (+))

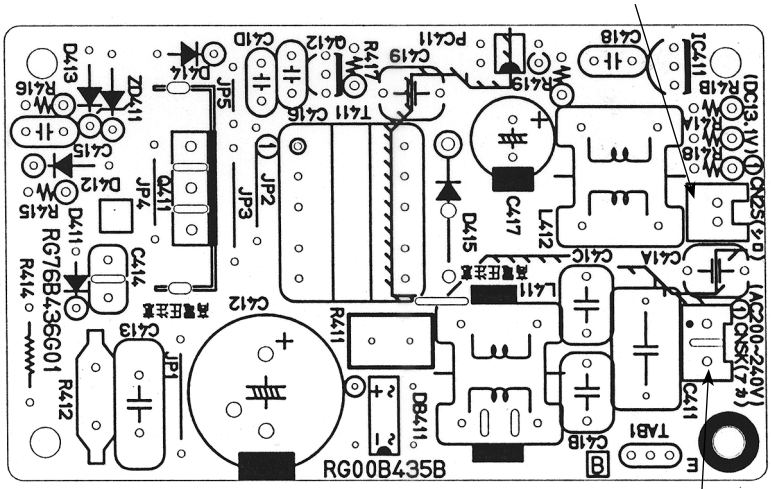

CNSK
Connect to the indoor controller board (CNDK)
Between ① to ③ 220-240V AC

10-6-2. Indoor controller board
PCA-RP50/60/71/100/125/140GA
PCA-RP50/60/71/100/125/140GA#1
PCH-P50/60/71/100/125/140GAH
PCA-RP50GA2
PCA-RP50GA2#1

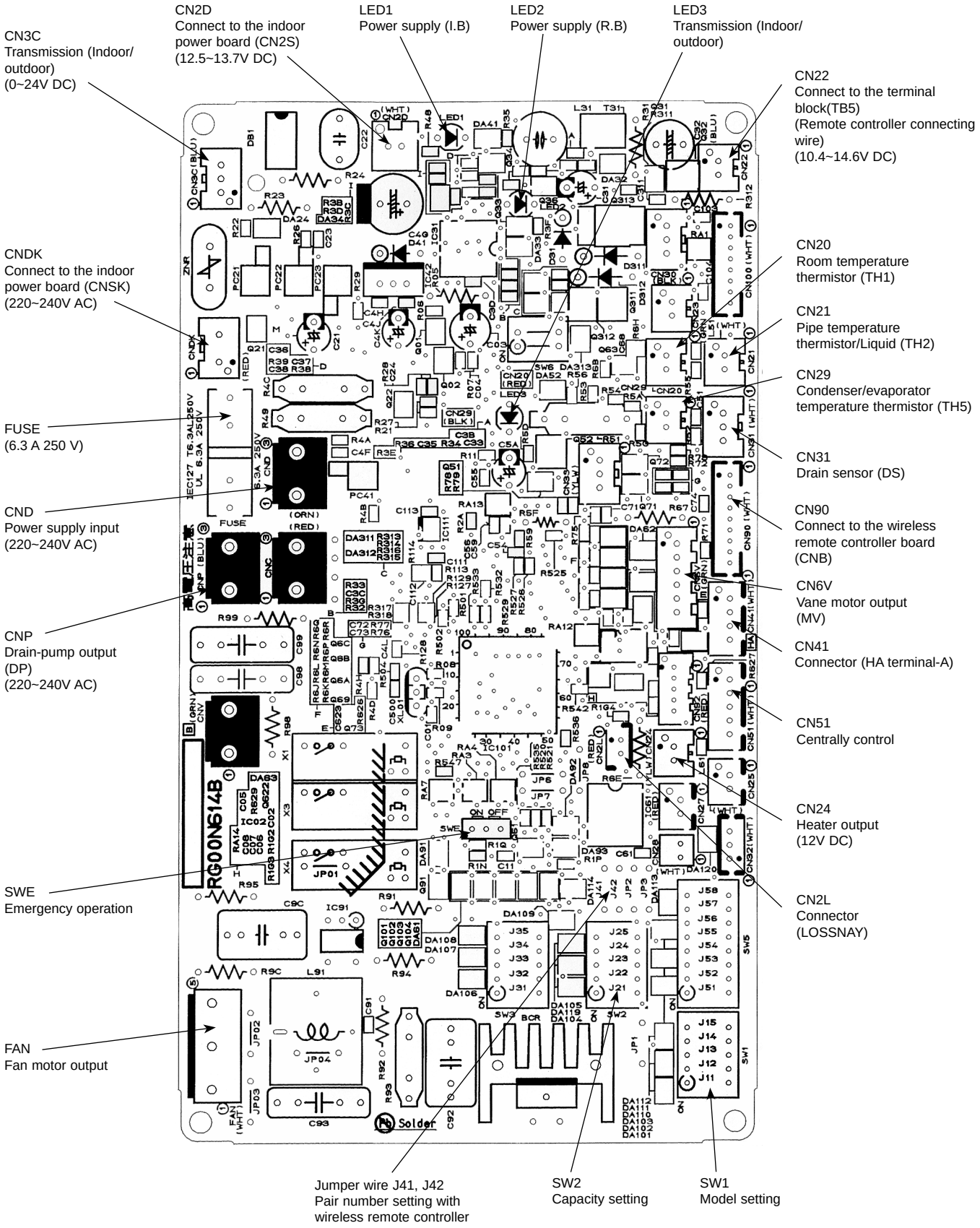

10-7. FUNCTIONS OF DIP SWITCH AND JUMPER WIRE

Each function is controlled by the dip switch and the jumper wire on control p.c. board.
SW1 and SW2 are equipped only for service parts.
Model setting and capacity setting are memorized in the nonvolatile memory of the control p.c. board of the unit.

(Marks in the table below) Jumper wire (○ : Short × : Open)

Jumper wire	Functions	Setting by the dip switch and jumper wire	Remarks
SW1	Model settings	For service board 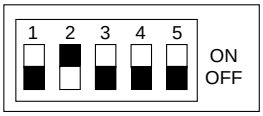 	
SW2	Capacity settings	MODELS / Service board PCA-RP50GA, PCH-P50GAH:  PCA-RP50GA2, PCA-RP60GA, PCH-P60GAH:  PCA-RP71GA, PCH-P71GAH:  PCA-RP100GA, PCH-P100GAH:  PCA-RP125GA, PCH-P125GAH: 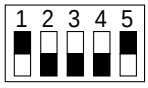 PCA-RP140GA, PCH-P140GAH:  	
J41 J42	Pair number setting with wireless remote controller	Wireless remote controller setting / Control PCB setting J41 / J42 0: ○ ○ 1: × ○ 2: ○ × 3 ~ 9: × ×	<Initial setting> Wireless remote controller: 0 Control PCB:○ (for both J41 and J42) Four pair number settings are supported. The pair number settings of the wireless remote controller and indoor control PCB (J41/J42) are given in the table on the left. ('×' in the table indicates the jumper line is disconnected.)
JP1	Unit type setting	Model / JP1 Without TH5: ○ With TH5: ×	There is no jumper (JP1) because these models have the cond./eva. temperature thermistor (TH5).
JP3	Indoor controller board type setting	Indoor controller board type / JP3 For product: × Service parts: ○	

11 SPECIAL FUNCTION

11-1. ROTATION FUNCTION(AND BACK-UP FUNCTION, 2ND STAGE CUT-IN FUNCTION)

For PCA-RP50/60/71/100/125/140GA#1,PCA-RP50GA2#1

11-1-1. Operation

(1) Rotation function (and Back-up function)

• Outline of functions

· Main and sub unit operate alternately according to the interval of rotation setting.

※ Main and sub unit should be set by refrigerant address.(Outdoor Dip switch setting)

Refrigerant address"00" ⟶ Main unit

Refrigerant address"01" ⟶ Sub unit

· When error occurrs to one unit, another unit will start operation.(Back-up function)

• System constraint

· This function is available only by the grouping control system(INDOOR UNIT : OUTDOOR UNIT=1:1) of 2 refrigerant groups.(Refer to Fig. 1)

· Main indoor unit should be connected for wired remote controller and the transmission line(TB5) for main and sub unit should also be connected. (Refer to Fig. 1)
(This function cannot be set by wireless remote controller.)

· Set refrigerant address of each unit.(Dip switch on the outdoor unit···Refrigerant address 00/01)

Operation pattern

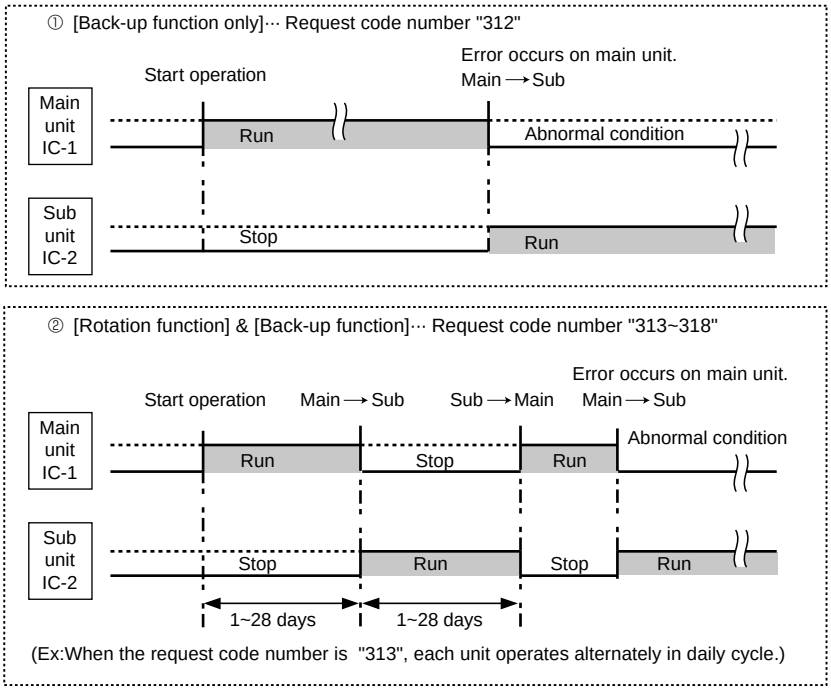

Fig. 1

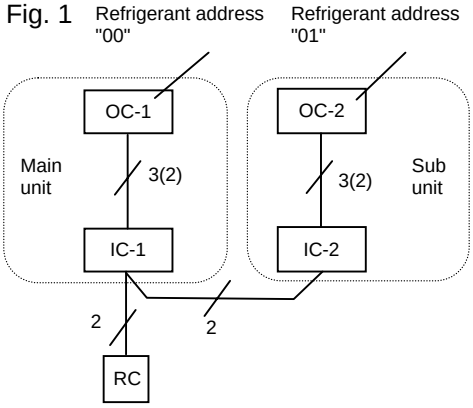

OC : Outdoor unit
IC : Indoor unit
RC : Wired remote controller

Note:

· When the uint is restarted to operate after turning off the power or OFF operation, the unit which was operating will start operation.

· To operate the main unit, refer to the 11-1-2. and set the requet code No. which is not the same as the current one, and set again the former request code No.

(2) 2nd stage cut-in function

Outline of functions

· Number of operating units is determined according to the room temperature and set point.

· When room temperature becomes higher than set point, standby unit starts.(2 units operation)

· When room temperature falls below set point -4℃, standby unit stops.(1 unit operation)

System constraint

· This function is available only in rotation operation and back-up function in cooling mode.

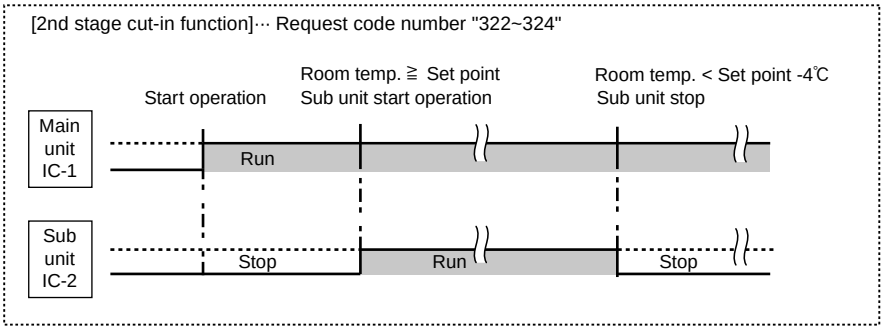

11-1-2. How to set rotation function(Back-up function, 2nd stage cut-in function)
You can set these functions by wired remote controller.(Maintenance monitor)

NOTICE

Both main and sub unit should be set in same setting.
Every time replacing indoor controller board for servicing, the function should be set again.

(1) Request Code List

Rotation setting

Setting No. (Request code)	Setting contents	Initial setting
No.1 (310)	Monitoring the request code of current setting.	
No.2 (311)	Rotation and Back-up OFF (Normal group control operation)	◎
No.3 (312)	Back-up function only	
No.4 (313)	Rotation ON (Alternating interval = 1day) and back up function	
No.5 (314)	Rotation ON (Alternating interval = 3day) and back up function	
No.6 (315)	Rotation ON (Alternating interval = 5day) and back up function	
No.7 (316)	Rotation ON (Alternating interval = 7day) and back up function	
No.8 (317)	Rotation ON (Alternating interval = 14day) and back up function	
No.9 (318)	Rotation ON (Alternating interval = 28day) and back up function	

2nd stage cut-in setting

Setting No. (Request code)	Setting contents	Initial setting
No.1 (320)	Monitoring the request code of current setting.	
No.2 (321)	Cut-in function OFF	◎
No.3 (322)	Cut-in Function ON(Set point = Set temp.+ 4°C(7.2°F))	
No.4 (323)	Cut-in Function ON(Set point = Set temp.+ 6°C(10.8°F))	
No.5 (324)	Cut-in Function ON(Set point = Set temp.+ 8°C(14.4°F))	

(2) Setting method of each function by wired remote controller

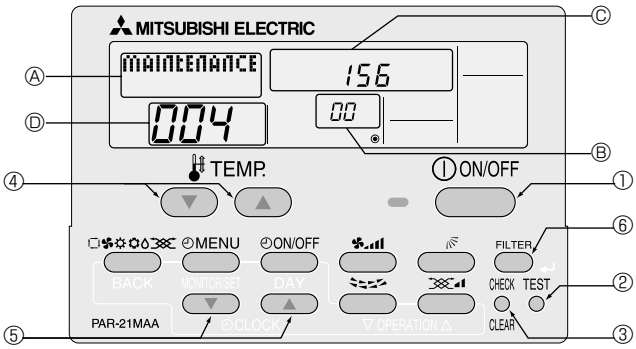

B: Refrigerant address
C: Data display area
D: Request code display area

1. Stop operation(①).

2. Press the (TEST) button (②) for 3 seconds so that [Maintenance mode] appears on the screen (Ⓐ).
   After a while, [00] appears in the refrigerant address number display area.(at Ⓑ)

3. Press the (CHECK) button (③) for 3 seconds to switch to [Maintenance monitor].
   Note) It is not possible to switch to [Maintenance monitor] during data request in maintenance mode
   (i.e., while “----” is blinking) since no buttons are operative.

   [----] appears on the screen (Ⓓ) when [Maintenance monitor] is activated.
   (The display (Ⓓ) now allows you to set a request code No.)

4. Press the [TEMP (▽ and △)] buttons (④) to select the desired refrigerant address.

   [ScreenB] → 00 ⟷ 01 ⟷ ····· ⟷ 15 ←

5. Press the [CLOCK (▽ and △)] buttons (⑤) to set the desired request code No.(“311~318”, “321~324”)

6. Press the (FILTER) button (⑥) to perform function setting.
   If above setting operations are done correctly, "Request code number will appear in data display area.(Ⓒ)
   [Example: When the "311" of "Request code number" is set, [311] appears on the screen.(Ⓒ)]

[Refererence]
You can check current "request code number" setting by setting the "request code number"(“310” or “320”) and pressing the (FILTER) button.(⑥)
[Example: When the current setting is "Setting No.2(Request code 311)", [311] appears on the screen.(Ⓒ)]

7. To return to normal mode, press the (ON/OFF) button (①).

12 DISASSEMBLY PROCEDURE

PCA-RP50/60/71/100/125/140GA
PCA-RP50/60/71/100/125/140GA#1
PCA-RP50GA2 PCA-RP50GA2#1
PCH-P50/60/71/100/125/140GAH

OPERATING PROCEDURE	PHOTOS&ILLUSTRATIONS
1. Removing the air intake grille (1) Slide the intake grille holding 2 knobs backward to open the intake grill. (2) When the intake grille left open, push the stoppers on the rear 2 hinges to pull out the intake grille.	**Figure 1** 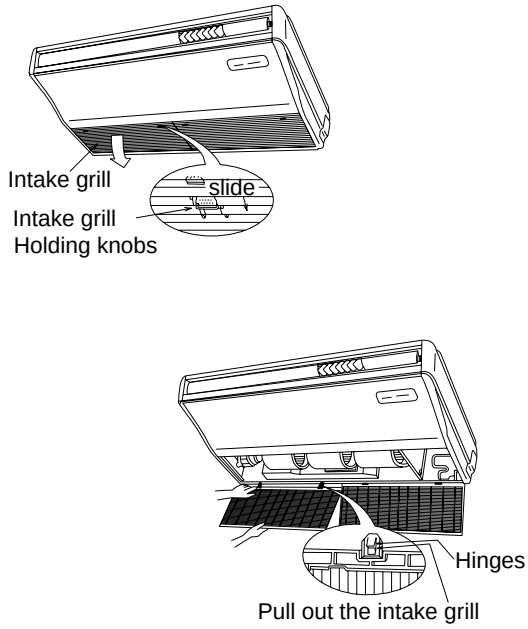
2. Removing the electrical box (1) Remove the air intake grille. (See the figure 1) (2) Remove the screw from the beam and remove the beam. (3) Remove the screws from the electrical cover, and remove the electrical cover. (4) Disconnect CN6V, CN21 and CN29. (5) Remove the screws from the electrical box and pull out the electrical box. <Electrical parts in the electrical box> Terminal block (for indoor / outdoor connecting line) Terminal block (for electric heater : PCH only) Terminal block (for remote controller) Fan motor capacitor Indoor control board Relay (PCH only) Power board	**Figure 2** 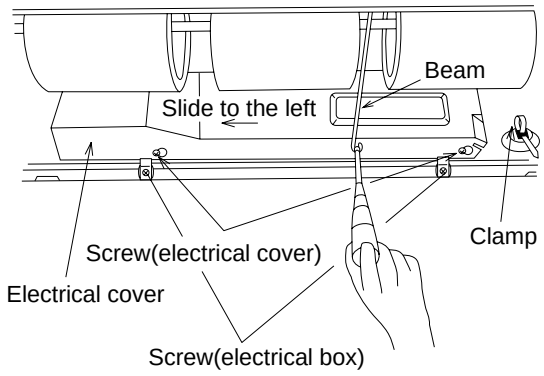 **Photo 1** 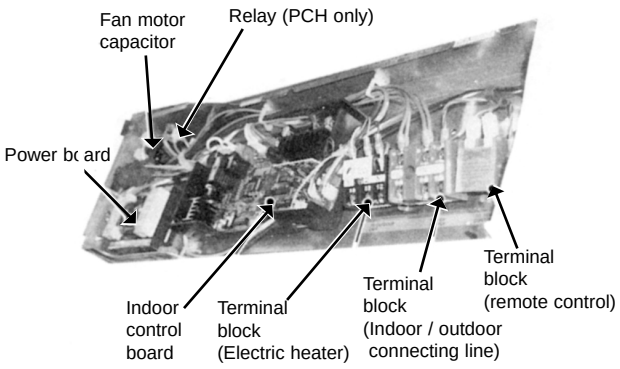

OPERATING PROCEDURE	PHOTOS&ILLUSTRATIONS
3. Removing the fan motor (1) Remove the intake grille. (See the figure 1) (2) Disconnect the fan motor connector. (3) Remove screws for removing the motor guard. (4) Remove screws for removing the fan guard. (5) Remove the screw for removing the motor support at both left and right side. (6) Loosen the set screws at the fan motor side of the connecting joint. (7) Slide the fan motor to the left side and pull it out.	**Photo 2** 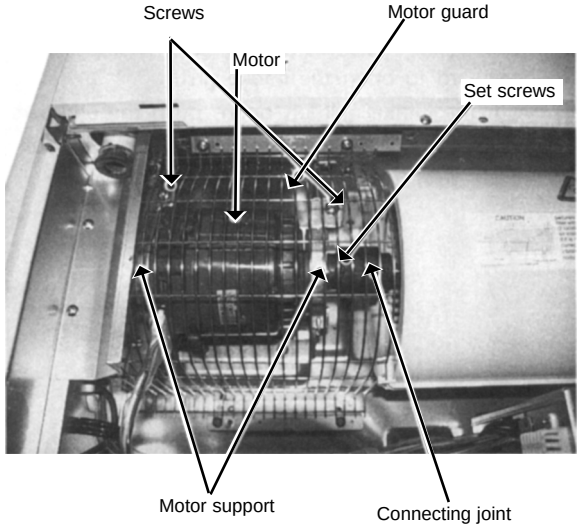
4. Removing the sirocco fan (1) Remove the air intake grille. (See the figure 1) (2) Remove 1 beam. (3) Remove screws for removing the motor guard. (4) Remove screws for removing the fan guard. (5) Remove the lower casing while pressing the stoppers at upper side of the casing. (6) Loosen the set screws at the connecting joint. (7) Remove the sirocco fan and shaft together by sliding the shaft to the left. (Note) Make sure that the upper side casing is snapped to the fan plate securely with catch.	**Photo 3** 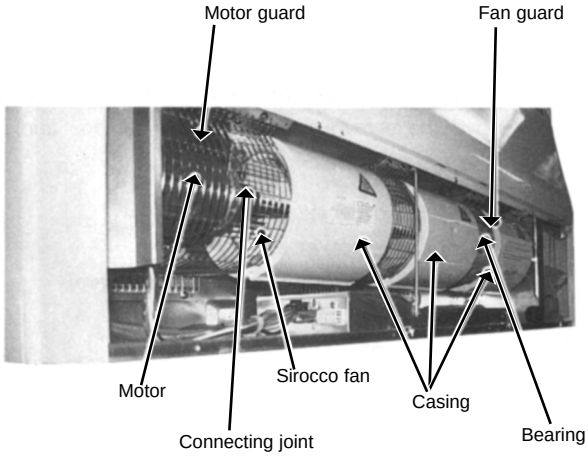
5. Removing the side panel (1) Remove the air intake grille. (See the figure 1) (2) Remove the screw from the side panel, and remove the side panel by sliding the panel to the front.	**Figure 3** 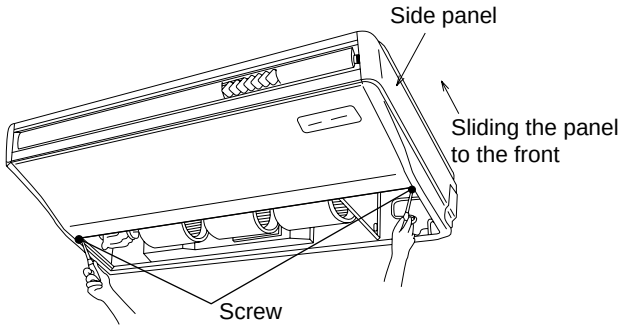

OPERATING PROCEDURE	PHOTOS
6. Removing the vane motor (1) Remove the air intake grille. (See the figure 1) (2) Remove the left side panel. (See the figure 3) (3) Remove the relay connector of vane motor. (4) Remove the electrical box. (5) Remove the screws of vane motor, then remove vane motor. (Note) Connect the lead wires and connectors properly and place them in the proper position so that the wires are not pinched by other parts.	**Photo 4** 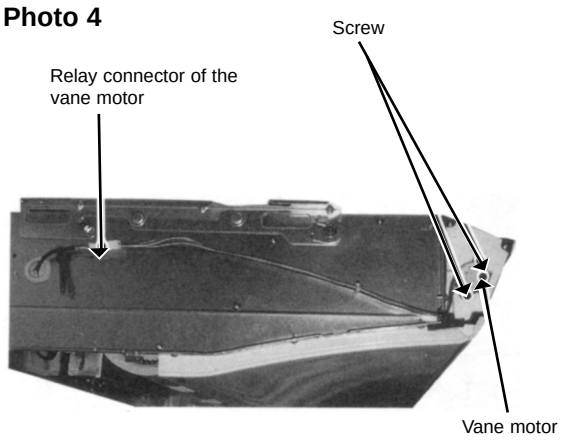
7. Removing the Indoor coil thermistor (1) Remove the air intake grille. (See the figure 1) (2) Remove the right side panel. (See the figure 3) (3) Remove the relay connector of the pipe thermistor. (4) Remove the screw, and remove the check panel. (5) Extract the indoor coil thermistor from the holder. <Caution for the installation> There is a possibility for the short circuit when connector gets wet by water through the thermistor lead wire. Therefore, lead wire of the indoor coil thermistor should be tied as shown in the photo 6.	**Photo 5** 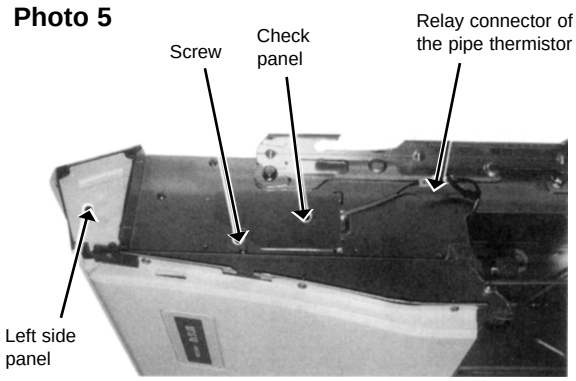 **Photo 6** 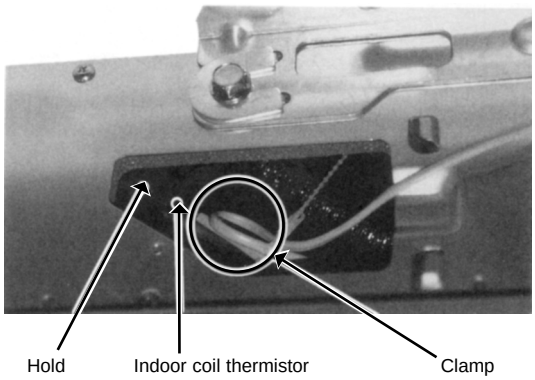
8. Removing the Under panel (1) Remove the air intake grille. (See the figure 1) (2) Remove the beam. (3) Remove the side panel (right and left). (See the figure 3) (4) Remove the 9 screws of the under panel, then remove the under panel. ※ Weight of the under panel : approx. 2kg.	**Photo 7** 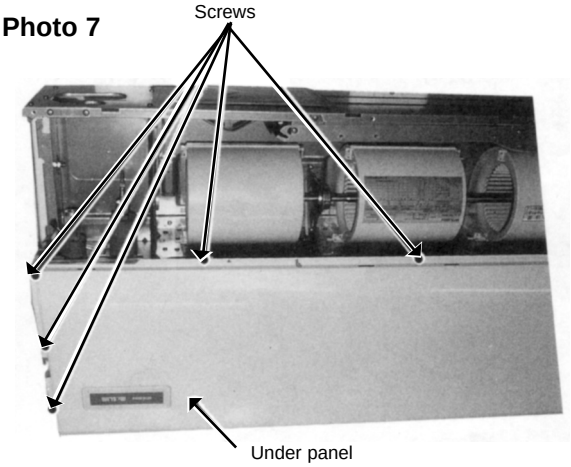

OPERATING PROCEDURE	PHOTOS
9. Removing the drain pan (1) Remove the air intake grille. (See the figure 1) (2) Remove the beam. (3) Remove the side panels of right and left. (See the figure 3) (4) Remove the under panel. Remove the screws of the right and left side drain pan. (5) Remove the 2 insulations in centre of the drain pan, and after removing the 2 screws, remove the drain pan. (Note) Please aware that there might be drain left in the drain pan when you remove the drain pump (option).	**Photo 8** 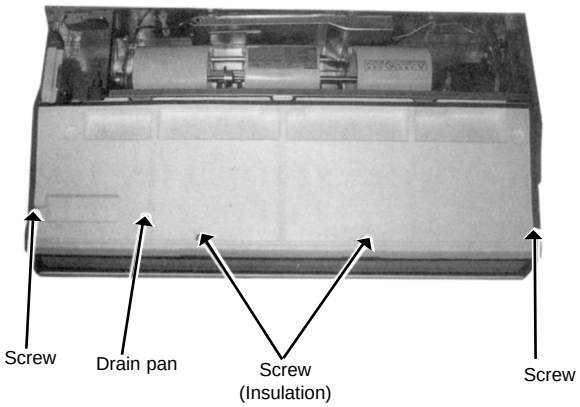
10. Removing the guide vane (1) Remove the intake grille. (See the figure 1) (2) Remove the beam. (3) Remove the side panels on right and left. (See the figure 3) (4) Remove the under panel. (See the photo 7) (5) Remove the drain pan. (See the photo 8) (6) Remove the screw from the guide vane, then remove the guide vane.	**Photo 9** 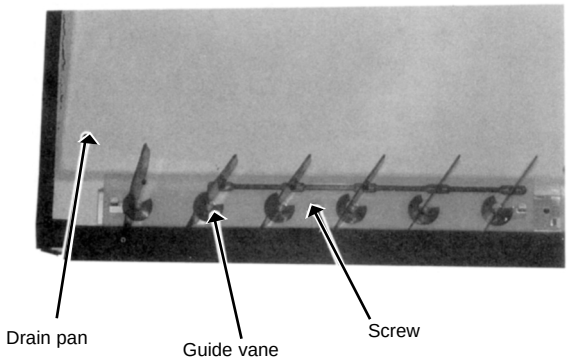
11. Removing the Auto vane (1) Remove the intake grille. (See the figure 1) (2) Remove the left side panel. (See the figure 3) (3) Remove the left side box. (4) Remove the under panel. (5) Remove the screw from the auto vane. (6) Slide the auto vane to the right side and pull the auto vane out.	**Photo 10** 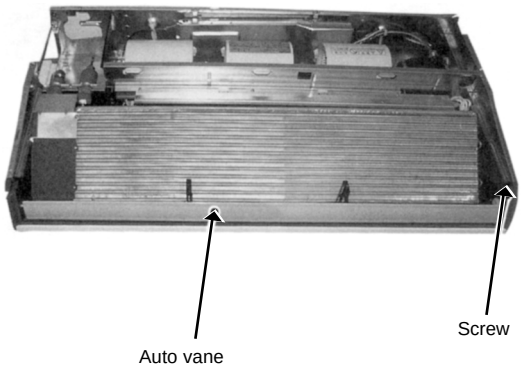

OPERATING PROCEDURE	PHOTOS
12. Removing the electric heater. (PCH only) (1) Remove the air intake grille. (See the figure 1) (2) Remove the beam. (3) Remove the electrical box cover and disconnect the connector (6P red) of the heater. (4) Loosen 2 clamps for the heater lead wires. (5) Remove the side panel (right and left). (See the figure 3) (6) Remove the under panel. (See the photo 7) (7) Remove the drain pan. (See the photo 8) (8) Remove the 3 screws from the service panel. (9) Pull out the heater with the service panel.	**Photo 11** 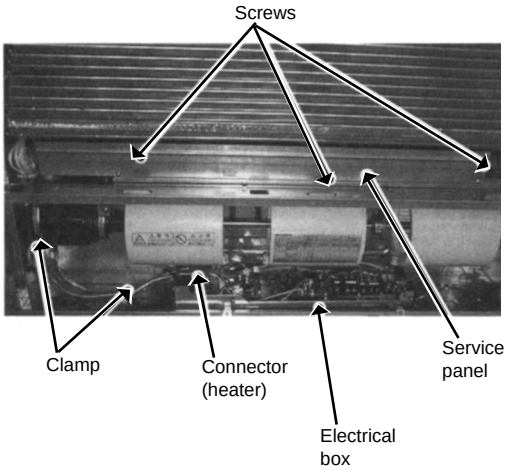
13. Removing the heat exchanger. (1) Remove the air intake grille. (See the figure 1) (2) Remove the beam. (3) Remove the side panel (right and left). (See the figure 3) (4) Disconnect the relay connector of the pipe thermistor. (5) Remove the under panel. (See the photo 7) (6) Remove the drain pan. (See the photo 8) (7) Unscrew the screw of the pipe cover, and remove the pipe cover. (8) Unscrew the screw of the pipe support, and remove the pipe support. (9) Unscrew the screw of the heat exchanger, and remove the heat exchanger. Remove the heat exchanger with care. Since this is quite heavy, removing work should be done with more than 2 people. ※Weight of heat exchanger : approx. 5.3kg	**Photo 12** 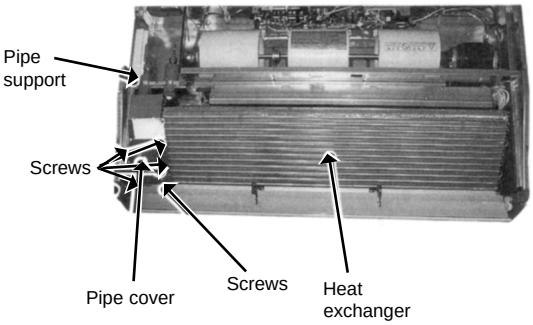

13 PARTS LIST(non-RoHS compliant)

FAN AND HEATER PARTS
PCH-P50GAH
PCA-RP50GA

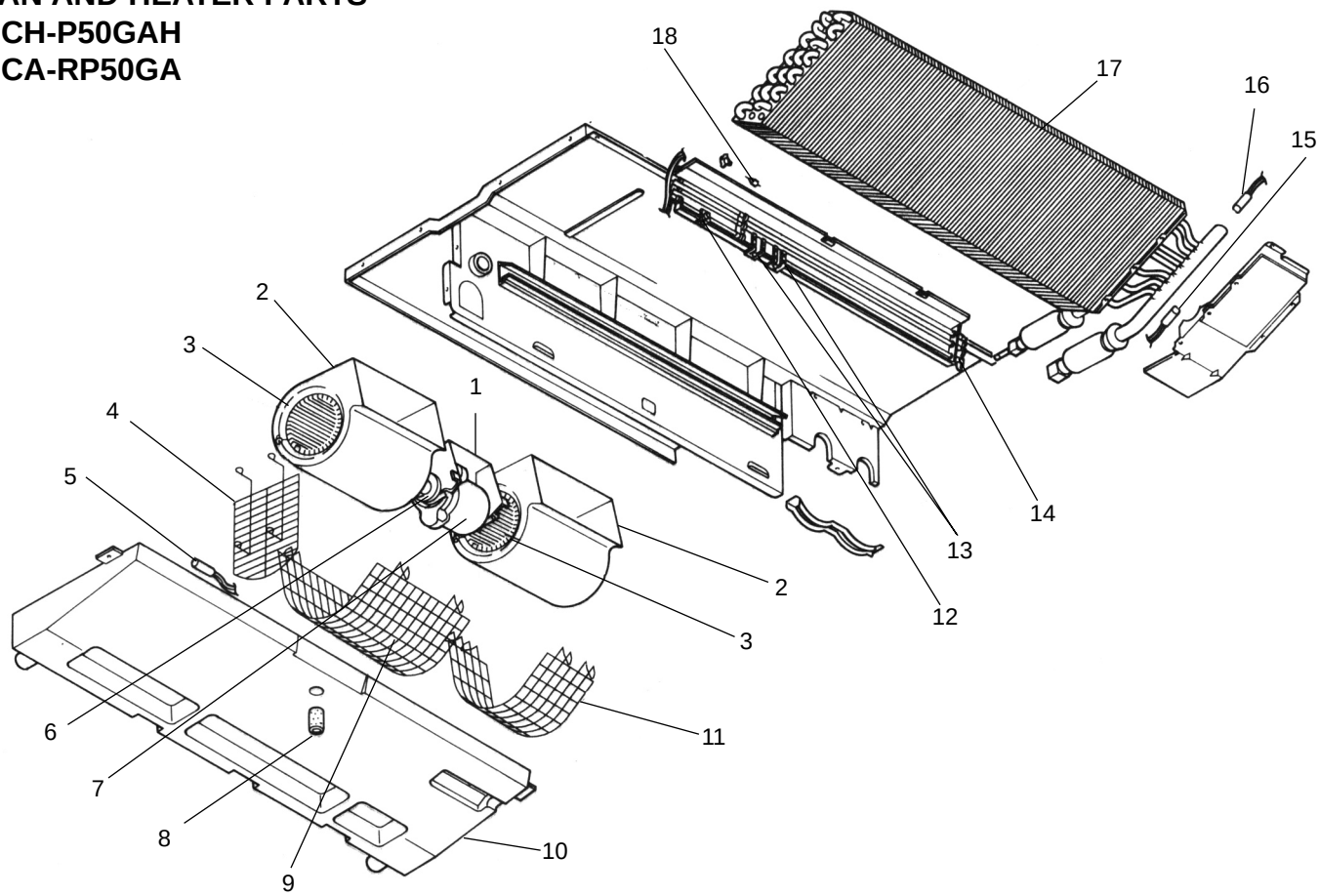

No.	Parts No.	Parts Name	Specifications	Q'ty / set PCH- P50GAH	Q'ty / set PCA- RP50GA	Remarks (Drawing No.)	Wiring Diagram Symbol	Recom-mended Q'ty
1	R01 17J 130	MOTOR LEG		1	1			
2	R01 17J 110	CASING		2	2			
3	R01 17J 114	SIROCCO FAN		2	2			
4	T7W 19J 675	FAN GUARD		1	1			
5	R01 E26 202	ROOM TEMPERATURE THERMISTOR		1	1		TH1	
6	R01 43E 126	PIECE (MOTOR)		1	1			
7	R01 17J 220	FAN MOTOR	D09B4P54MS	1	1		MF	
8	R01 17J 524	DRAIN PLUG		1	1			
9	T7W 17J 675	FAN GUARD		1	1			
10	R01 A14 529	DRAIN PAN ASSY		1	1			
11	T7W 18J 675	FAN GUARD		1	1			
12	R01 46K 700	THERMAL SWITCH	OFF:50℃ ON:35℃	1			26H	
13	R01 18J 303	INSULATOR		3				
	R01 20J 303	INSULATOR		1				
14	T7W 23J 300	HEATER ELEMENT	80V 466W	3			H1	
15	R01 17J 202	PIPE TEMPERATURE THERMISTOR		1	1		TH2	
16	R01 E27 202	CONDENSER / EVAPORATOR TEMPERATURE THERMISTOR		1	1		TH5	
17	R01 E38 480	HEAT EXCHANGER		1				
	T7W K00 480	HEAT EXCHANGER			1			
18	R01 P02 706	THERMAL FUSE	250V 98℃ 10A	1			FS1,2	

FAN AND HEATER PARTS
PCH-P60GAH, PCA-RP60GA
PCH-P71GAH, PCA-RP71GA

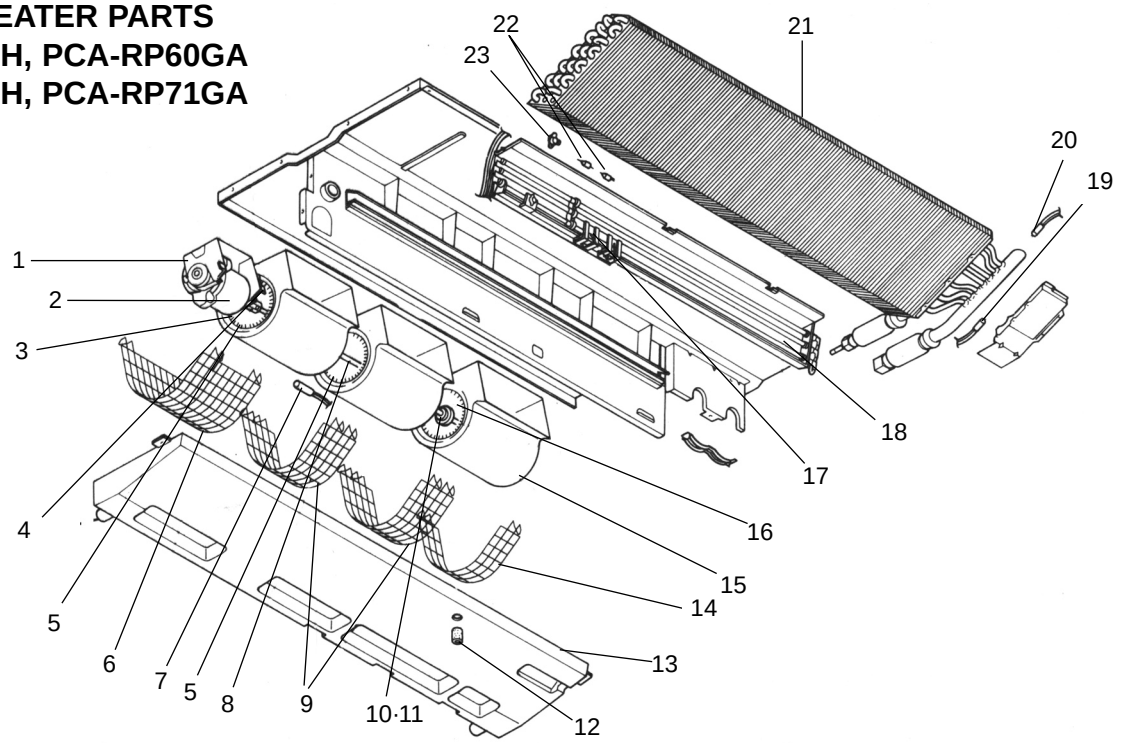

No.	Parts No.	Parts Name	Specifications	Q'ty / set				Remarks (Drawing No.)	Wiring Diagram Symbol	Recom-mended Q'ty
				PCH-		PCA-				
				P60 GAH	P71 GAH	RP60 GA	RP71 GA			
1	R01 29J 130	MOTOR LEG		1	1	1	1			
2	T7W 30J 762	FAN MOTOR	DO9C4P70MS	1	1	1	1		MF	
3	R01 700 116	SHAFT JOINT		1	1	1	1			
4	R01 43E 126	PIECE (MOTOR)		1	1	1	1			
5	R01 29J 114	SIROCCO FAN		2	2	2	2			
6	T7W 20J 675	FAN GUARD		1	1	1	1			
7	R01 E26 202	ROOM TEMPERATURE THERMISTOR		1	1	1	1		TH1	
8	R01 29J 100	SHAFT (FAN)		1	1	1	1			
9	T7W 21J 675	FAN GUARD		2	2	2	2			
10	R01 E00 103	SLEEVE BEARING		1	1	1	1			
11	R01 29J 145	BEARING SUPPORT		1	1	1	1			
12	R01 17J 524	DRAIN PLUG		1	1	1	1			
13	R01 A15 529	DRAIN PAN ASSY		1	1	1	1			
14	T7W 18J 675	FAN GUARD		1	1	1	1			
15	R01 17J 110	CASING		3	3	3	3			
16	R01 33J 114	SIROCCO FAN		1	1	1	1			
17	R01 20J 303	INSULATOR		1	1					
	R01 30J 303	INSULATOR		3	3					
18	T7W 30J 300	HEATER ELEMENT	80V 700W	3	3				H1	
19	R01 17J 202	PIPE TEMPERATURE THERMISTOR		1	1	1	1		TH2	
20	R01 E27 202	CONDENSER / EVAPORATOR TEMPERATURE THERMISTOR		1	1	1	1		TH5	
21	R01 H00 480	HEAT EXCHANGER		1	1		1			
	T7W K01 480	HEAT EXCHANGER				1				
22	T7W 23J 706	THERMAL FUSE	110℃ 16A 250V	1	1				FS1,2	
23	R01 46K 700	THERMAL SWITCH	OFF:50℃ ON:35℃	1	1				26H	

FAN AND HEATER PARTS
PCH-P100GAH
PCA-RP100GA

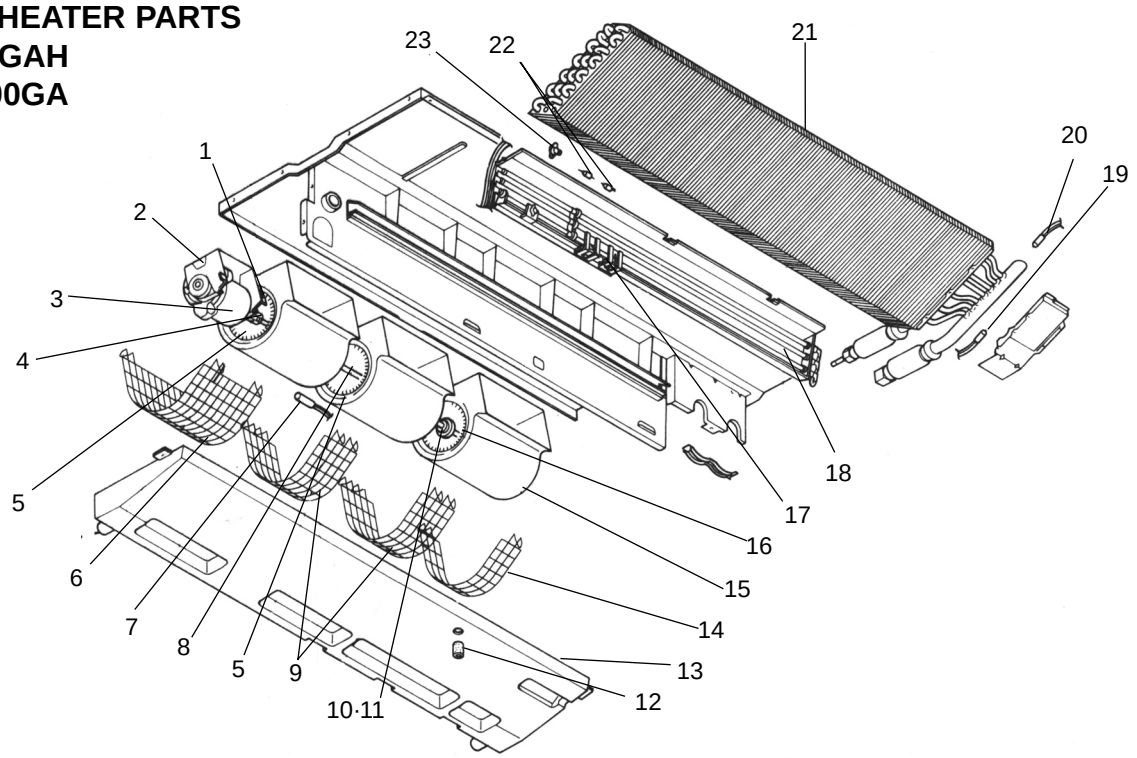

No.	Parts No.	Parts Name	Specifications	Q'ty / set PCH- P100GAH	Q'ty / set PCA- RP100GA	Remarks (Drawing No.)	Wiring Diagram Symbol	Recom-mended Q'ty
1	R01 43E 126	PIECE (MOTOR)		1	1			
2	R01 35J 130	MOTOR LEG		1	1			
3	R01 35J 220	FAN MOTOR	D10B4P90MS	1	1		MF	
4	R01 700 116	SHAFT JOINT		1	1			
5	R01 35J 114	SIROCCO FAN		2	2			
6	T7W 22J 675	FAN GUARD		1	1			
7	R01 E26 202	ROOM TEMPERATURE THERMISTOR		1	1		TH1	
8	R01 29J 100	SHAFT		1	1			
9	T7W 23J 675	FAN GUARD		2	2			
10	R01 E00 103	SLEEVE BEARING		1	1			
11	R01 35J 145	BEARING SUPPORT		1	1			
12	R01 17J 524	DRAIN PLUG		1	1			
13	R01 A16 529	DRAIN PAN ASSY		1	1			
14	T7W 24J 675	FAN GUARD		1	1			
15	R01 35J 110	CASING		3	3			
16	R01 39J 114	SIROCCO FAN		1	1			
17	R01 20J 303	INSULATOR		1				
	R01 36J 303	INSULATOR		3				
18	T7W 39J 300	HEATER ELEMENT	80V 900W	3			H1	
19	R01 17J 202	PIPE TEMPERATURE THERMISTOR		1	1		TH2	
20	R01 E27 202	CONDENSER / EVAPORATOR TEMPERATURE THERMISTOR		1	1		TH5	
21	R01 E33 480	HEAT EXCHANGER		1				
	T7W K02 480	HEAT EXCHANGER			1			
22	T7W 589 706	THERMAL FUSE	117℃ 16A 250V	1			FS1,2	
23	R01 46K 700	THERMAL SWITCH	OFF:50℃ ON:35℃	1			26H	

FAN AND HEATER PARTS
PCH-P125GAH, PCA-RP125GA
PCH-P140GAH, PCA-RP140GA

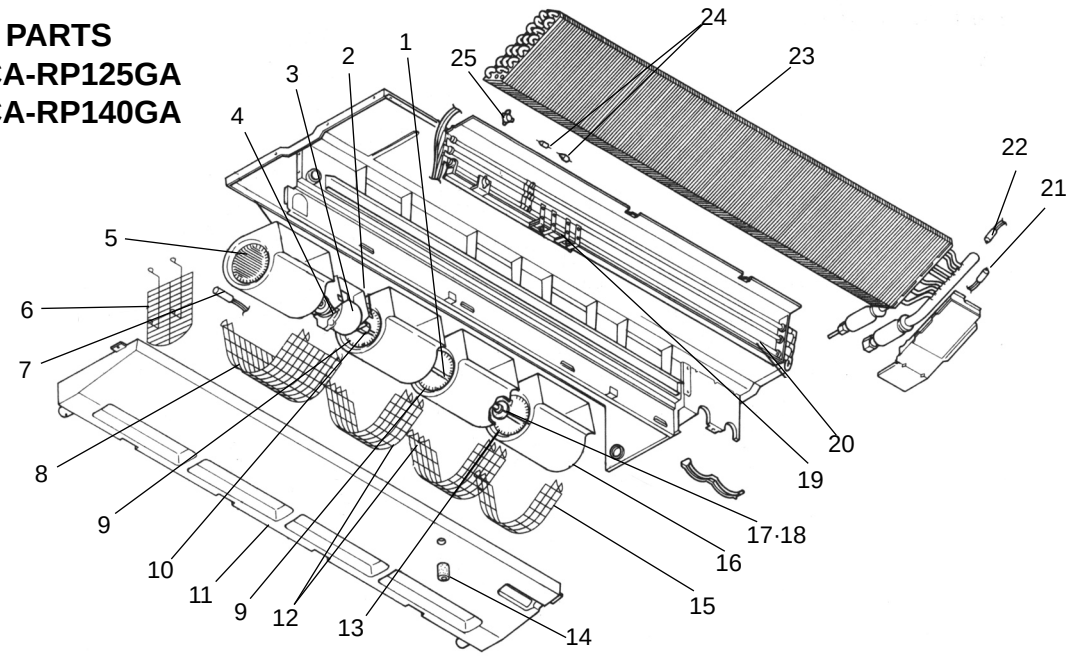

No.	Parts No.	Parts Name	Specifications	Q'ty / set PCH- P125 GAH	PCH- P140 GAH	PCA- RP125 GA	PCA- RP140 GA	Remarks (Drawing No.)	Wiring Diagram Symbol	Recom-mended Q'ty
1	R01 29J 100	SHAFT		1	1	1	1			
2	R01 41J 130	MOTOR LEG		1	1	1	1			
3	R01 41J 220	FAN MOTOR	D10B4P150MS	1	1	1	1		MF	
4	R01 43E 126	PIECE (MOTOR)		1	1	1	1			
5	R01 41J 114	SIROCCO FAN		1	1	1	1			
6	T7W 26J 675	FAN GUARD		1	1	1	1			
7	R01 E26 202	ROOM TEMPERATURE THERMISTOR		1	1	1	1		TH1	
8	T7W 25J 675	FAN GUARD		1	1	1	1			
9	R01 35J 114	SIROCCO FAN		2	2	2	2			
10	R01 700 116	SHAFT JOINT		1	1	1	1			
11	R01 A17 529	DRAIN PAN ASSY		1	1	1	1			
12	T7W 23J 675	FAN GUARD		2	2	2	2			
13	R01 39J 114	SIROCCO FAN		1	1	1	1			
14	R01 17J 524	DRAIN PLUG		1	1	1	1			
15	T7W 24J 675	FAN GUARD		1	1	1	1			
16	R01 35J 110	CASING		4	4	4	4			
17	R01 E00 103	SLEEVE BEARING		1	1	1	1			
18	R01 35J 145	BEARING SUPPORT		1	1	1	1			
19	R01 20J 303	INSULATOR		1	1					
	R01 36J 303	INSULATOR		6	6					
20	T7W 43J 300	HEATER ELEMENT	80V 1000W	3	3				H1	
21	R01 17J 202	PIPE TEMPERATURE THERMISTOR		1	1	1	1		TH2	
22	R01 E27 202	CONDENSER / EVAPORATOR TEMPERATURE THERMISTOR		1	1	1	1		TH5	
23	T7W K03 480	HEAT EXCHANGER				1				
	T7W K04 480	HEAT EXCHANGER					1			
	T7W K05 480	HEAT EXCHANGER		1						
	T7W K06 480	HEAT EXCHANGER			1					
24	T7W 23J 706	THERMAL FUSE	110℃ 16A 250V	1	1				FS1,2	
25	R01 46K 700	THERMAL SWITCH	OFF:50℃ ON:35℃	1	1				26H	

STRUCTURAL PART
PCA-RP50GA
PCH-P50GAH

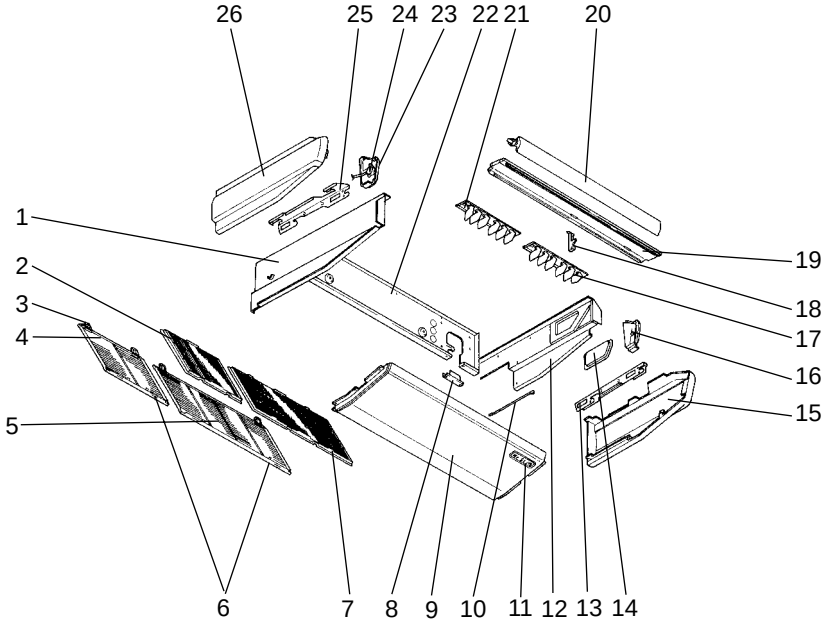

Part numbers that are circled are not shown in the figure.

No.	Parts No.	Parts Name	Specifications	Q'ty/set PCA-RP50GA PCH-P50GAH	Remarks (Drawing No.)	Wiring Diagram Symbol	Recom-mended Q'ty
1	R01 57N 666	S.PLATE-L		1			
2	R01 A15 500	L.L FILTER		1			
3	R01 17J 061	GRILLE HINGE		4			
4	R01 18J 691	GRILLE ASSY		1			
5	R01 17J 691	GRILLE ASSY		1			
6	R01 17J 054	GRILLE CATCH		4			
7	R01 A14 500	L.L FILTER		1			
8	—	REAR SUPPORT		1	(BG02H454K01)		
9	R01 17J 669	UNDER PANEL		1			
10	—	BEAM(GA)		2	(BG17H464H08)		
11	T7W E01 070	W.BOARD CASE		1			
12	R01 18J 665	S.PLATE-R		1			
13	R01 17J 808	RIGHT LEG (R)		1			
14	R01 17J 668	SERVICE PANEL		1			
15	R01 17J 661	RIGHT SIDE PANEL		1			
16	R01 17J 067	RIGHT SIDE BOX		1			
17	R01 37J 085	G.V ASSY-6R		1			
18	R01 E00 033	VANE SUPPORT		1			
19	R01 17J 651	FRONT PANEL		1			
20	R01 17J 002	AUTO VANE		1			
21	R01 37J 086	G.V ASSY-6L		1			
22	R01 A14 676	REAR PANEL		1			
23	R01 17J 068	LEFT SIDE BOX		1			
24	R01 E03 223	VANE MOTOR		1		MV	
25	R01 17J 809	LEFT LEG (L)		1			
26	R01 17J 662	LEFT SIDE PANEL		1			
㉗	R01 17J 523	JOINT SOCKET		1			
㉘	T7W E00 072	DRAIN HOSE COVER		1			

STRUCTURAL PART
PCA-RP60GA
PCA-RP71GA
PCA-RP100GA
PCH-P60GAH
PCH-P71GAH
PCH-P100GAH

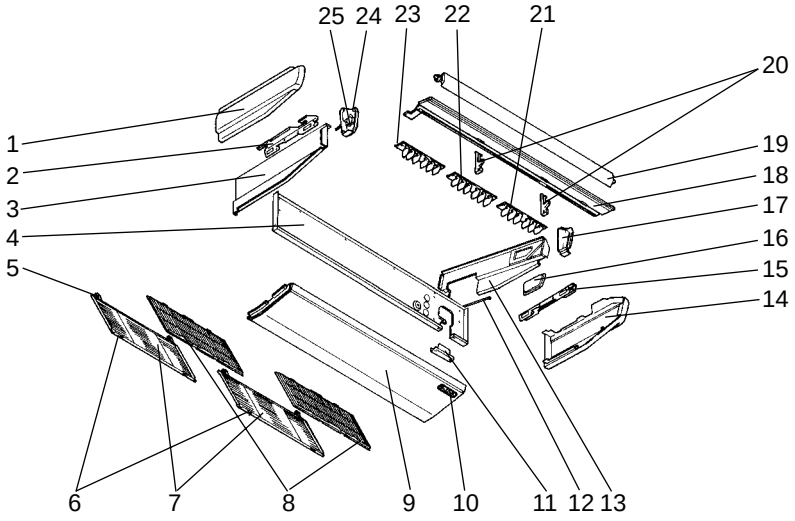

Part numbers that are circled are not show in the figure.

No.	Parts No.	Parts Name	Specifications	Q'ty/set PCA-RP/PCH-P 60/71 GA/GAH	Q'ty/set PCA-RP/PCH-P 100 GA/GAH	Remarks (Drawing No.)	Wiring Diagram Symbol	Recom-mended Q'ty
1	R01 17J 662	LEFT SIDE PANEL		1				
	R01 35J 662	LEFT SIDE PANEL			1			
2	R01 17J 809	LEFT LEG		1	1			
3	R01 57N 666	S.PLATE-L		1				
	R01 35J 666	S.PLATE-L			1			
4	R01 A15 676	REAR PANEL		1				
	R01 A16 676	REAR PANEL			1			
5	R01 17J 061	GRILLE HINGE		4	4			
6	R01 17J 054	GRILLE CATCH		4	4			
7	R01 17J 691	GRILLE ASSY		2	2			
8	R01 A14 500	L.L FILTER		2	2			
9	R01 29J 669	UNDER PANEL		1	1			
10	T7W E01 070	W.BOARD CASE		1	1			
11	—	REAR SUPPORT		1	1	(BG02H454K01)		
12	—	BEAM (GA)		2	2	(BG17H464H08)		
13	R01 18J 665	S.PLATE-R		1				
	R01 E00 665	S.PLATE-R			1			
14	R01 17J 661	RIGHT SIDE PANEL		1				
	R01 35J 661	RIGHT SIDE PANEL			1			
15	R01 17J 808	RIGHT LEG		1	1			
16	R01 17J 668	SERVICE PANEL		1				
	R01 18J 668	SERVICE PANEL			1			
17	R01 17J 067	RIGHT SIDE BOX		1				
	R01 35J 067	RIGHT SIDE BOX			1			
18	R01 29J 651	FRONT PANEL		1				
	R01 36J 651	FRONT PANEL			1			
19	R01 29J 002	AUTO VANE		1				
	R01 E03 002	AUTO VANE			1			
20	R01 E00 033	VANE SUPPORT		2				
	R01 E01 033	VANE SUPPORT			2			
21	R01 37J 085	G.V ASSY-6R		1	1			
22	R01 37J 087	G.V ASSY-6C		1	1			
23	R01 37J 086	G.V ASSY-6L		1	1			
24	R01 17J 068	LEFT SIDE BOX		1				
	R01 E00 068	LEFT SIDE BOX			1			
25	R01 29J 223	VANE MOTOR		1			MV	
	R01 35J 223	VANE MOTOR			1		MV	
㉖	R01 17J 523	JOINT SOCKET		1	1			
㉗	T7W E00 072	DRAIN HOSE COVER		1	1			

STRUCTURAL PART
PCA-RP125GA
PCA-RP140GA
PCH-P125GAH
PCH-P140GAH

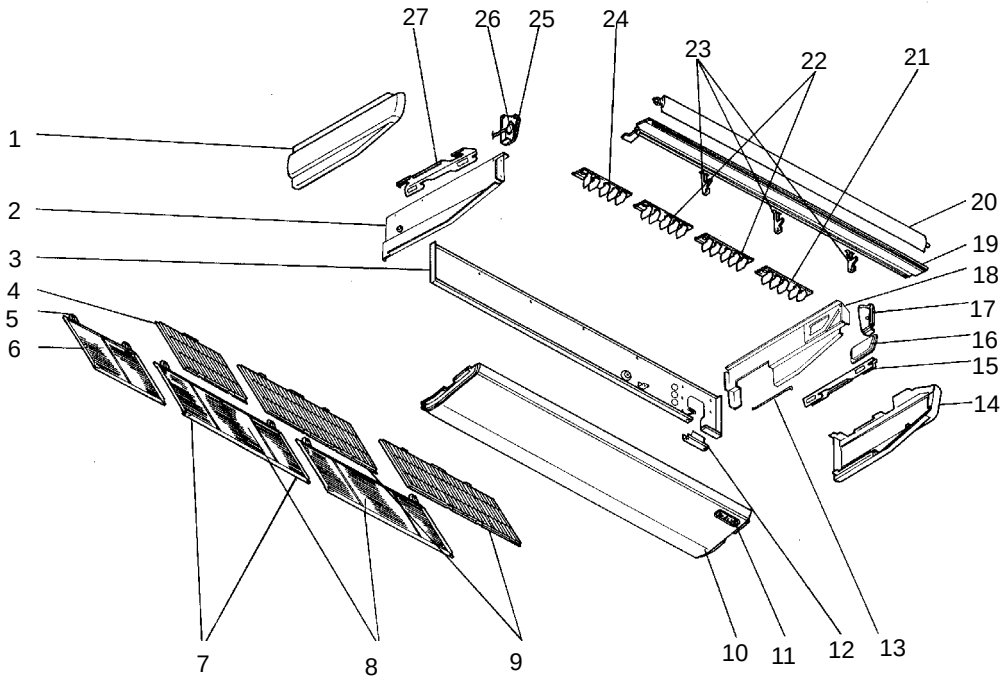

Part numbers that are circled are not shown in the figure.

No.	Parts No.	Parts Name	Specifications	Q'ty/set PCA-RP125/140GA PCH-P125/140GAH	Remarks (Drawing No.)	Wiring Diagram Symbol	Recom-mended Q'ty
1	R01 35J 662	LEFT SIDE PANEL		1			
2	R01 35J 666	S.PLATE-L		1			
3	R01 A17 676	REAR PANEL		1			
4	R01 A15 500	L.L FILTER		1			
5	R01 17J 061	GRILLE HINGE		6			
6	R01 18J 691	GRILLE ASSY		1			
7	R01 17J 054	GRILLE CATCH		6			
8	R01 17J 691	GRILLE ASSY		2			
9	R01 A14 500	L.L FILTER		2			
10	R01 41J 669	UNDER PANEL		1			
11	T7W E01 070	W.BOARD CASE		1			
12	—	REAR SUPPORT		1	(BG02H454K01)		
13	—	BEAM(GA)		3	(BG17H464H08)		
14	R01 35J 661	RIGHT SIDE PANEL		1			
15	R01 17J 808	RIGHT LEG		1			
16	R01 18J 668	SERVICE PANEL		1			
17	R01 35J 067	RIGHT SIDE BOX		1			
18	R01 E00 665	S.PLATE-R		1			
19	R01 41J 651	FRONT PANEL		1			
20	R01 E04 002	AUTO VANE		1			
21	R01 41J 085	G.V ASSY-5R		1			
22	R01 43J 087	G.V ASSY-5C		2			
23	R01 E01 033	VANE SUPPORT		3			
24	R01 42J 086	G.V ASSY-5L		1			
25	R01 E00 068	LEFT SIDE BOX		1			
26	R01 35J 223	VANE MOTOR		1		MV	
27	R01 17J 809	LEFT LEG		1			
㉘	R01 17J 523	JOINT SOCKET		1			
㉙	T7W E00 072	DRAIN HOSE COVER		1			

ELECTRICAL PARTS
PCA-RP50GA
PCA-RP60GA
PCA-RP71GA
PCA-RP100GA
PCA-RP125GA
PCA-RP140GA

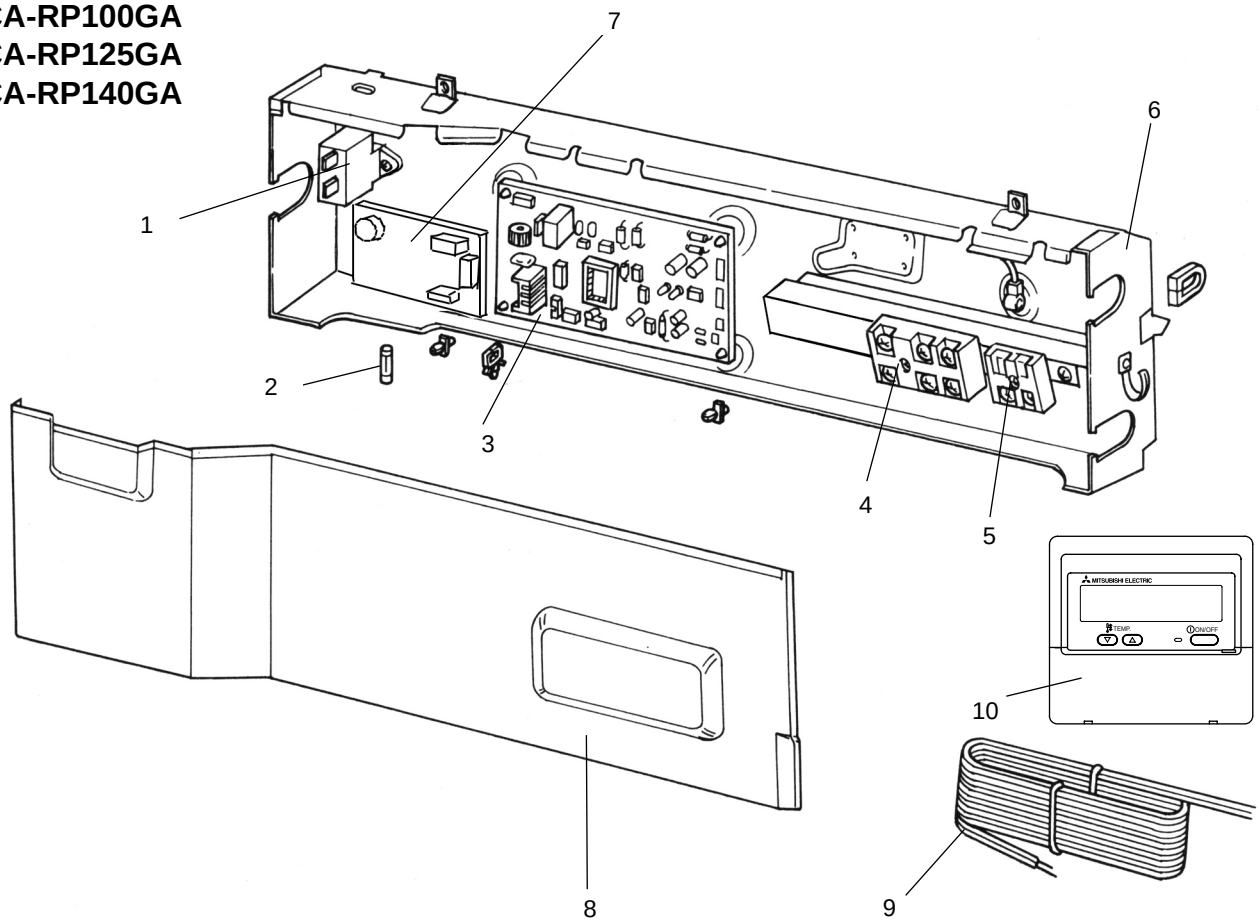

No.	Parts No.	Parts Name	Specifications	Q'ty PCA-RP 50 GA	60/71 GA	100 GA	125/140 GA	Remarks (Drawing No.)	Wiring Diagram Symbol	Recom-mended Q'ty
1	R01 30L 255	CAPACITOR	3μF 440V	1					C	
	T7W 39J 255	CAPACITOR	4μF 440V		1	1			C	
	R01 A13 255	CAPACITOR	6μF 440V				1		C	
2	R01 E02 239	FUSE	250V 6.3A	1	1	1	1		FUSE	
3	T7W E40 310	INDOOR CONTROLLER BOARD		1	1	1	1		I.B	
4	T7W E23 716	TERMINAL BLOCK	3P(S1,S2,S3)	1	1	1	1		TB4	
5	T7W 512 716	TERMINAL BLOCK	2P(1,2)	1	1	1	1		TB5	
6	—	CONTROL BOX		1	1	1	1	(BG00N015G31)		
7	R01 E02 313	POWER BOARD		1	1	1	1		P.B	
8	—	CONTROL COVER		1				(BG02A804G27)		
	—	CONTROL COVER			1		1	(BG02A804G28)		
	—	CONTROL COVER				1		(BG02A804G29)		
9	T7W A00 305	REMOTE CONTROLLER CORD		1	1	1	1			
10	T7W E08 713	REMOTE CONTROLLER	PAR-21MAA	1	1	1	1		R.B	

ELECTRICAL PARTS
PCH-P50GAH, PCH-P100GAH
PCH-P60GAH, PCH-P125GAH
PCH-P71GAH, PCH-P140GAH

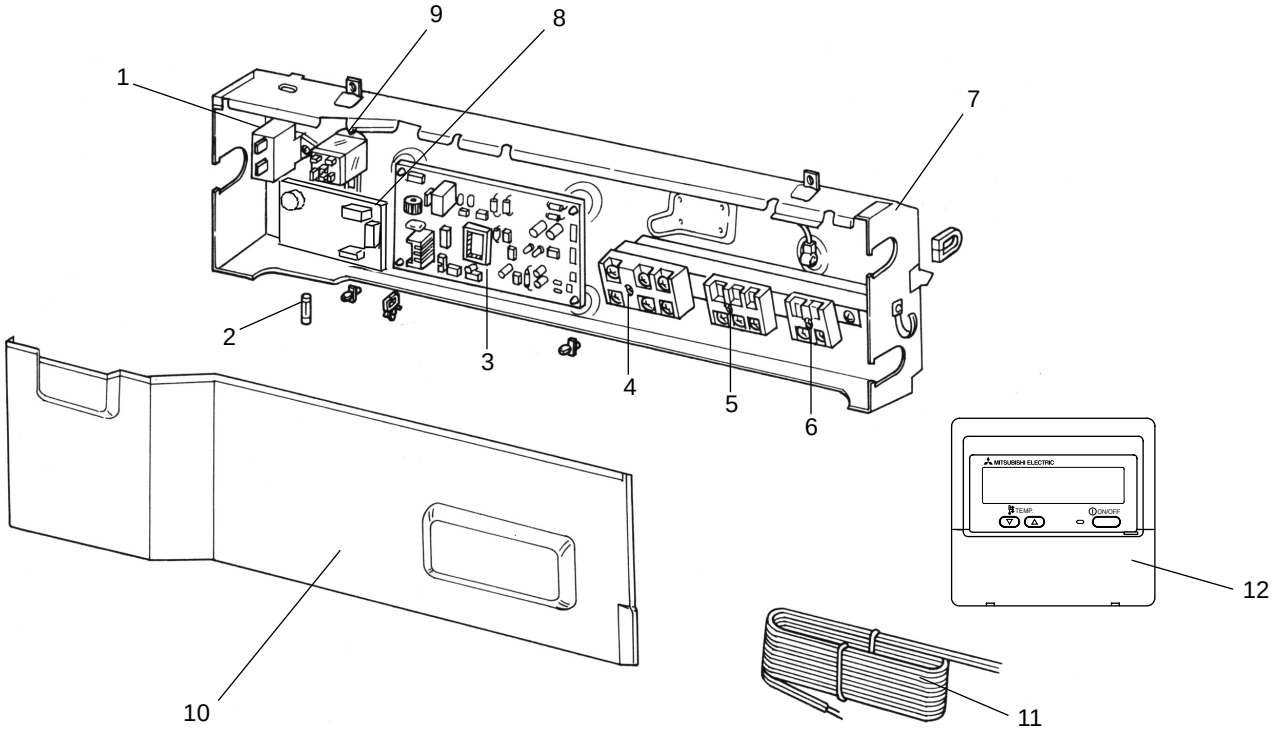

No.	Parts No.	Parts Name	Specifications	Q'ty / set PCH-P 50 GAH	60/71 GAH	100 GAH	125/140 GAH	Remarks (Drawing No.)	Wiring Diagram Symbol	Recom-mended Q'ty
1	R01 30L 255	CAPACITOR	3μF 440V	1					C	
	T7W 39J 255	CAPACITOR	4μF 440V		1	1			C	
	R01 A13 255	CAPACITOR	6μF 440V				1		C	
2	R01 E02 239	FUSE	250V 6.3A	1	1	1	1		FUSE	
3	T7W E40 310	INDOOR CONTROLLER BOARD		1	1	1	1		I.B	
4	T7W A14 716	TERMINAL BLOCK	3P (L,N, ⏚)	1	1	1	1		TB2	
5	T7W E23 716	TERMINAL BLOCK	3P (S1,S2,S3)	1	1	1	1		TB4	
6	T7W 512 716	TERMINAL BLOCK	2P (1,2)	1	1	1	1		TB5	
7	—	CONTROL BOX		1	1	1	1	(BG00N015G32)		
8	R01 E02 313	POWER BOARD		1	1	1	1		P.B	
9	R01 71G 215	RELAY	JC-1A DC12V	1	1	1	1		88H	
10	—	CONTROL COVER		1				(BG02A804G27)		
	—	CONTROL COVER			1		1	(BG02A804G28)		
	—	CONTROL COVER				1		(BG02A804G29)		
11	T7W A00 305	REMOTE CONTROLLER CORD	10m	1	1	1	1			
12	T7W E08 713	REMOTE CONTROLLER	PAR-21MAA	1	1	1	1		R.B	

14 RoHS PARTS LIST

FAN AND HEATER PARTS
PCH-P50GAH
PCA-RP50GA
PCA-RP50GA#1

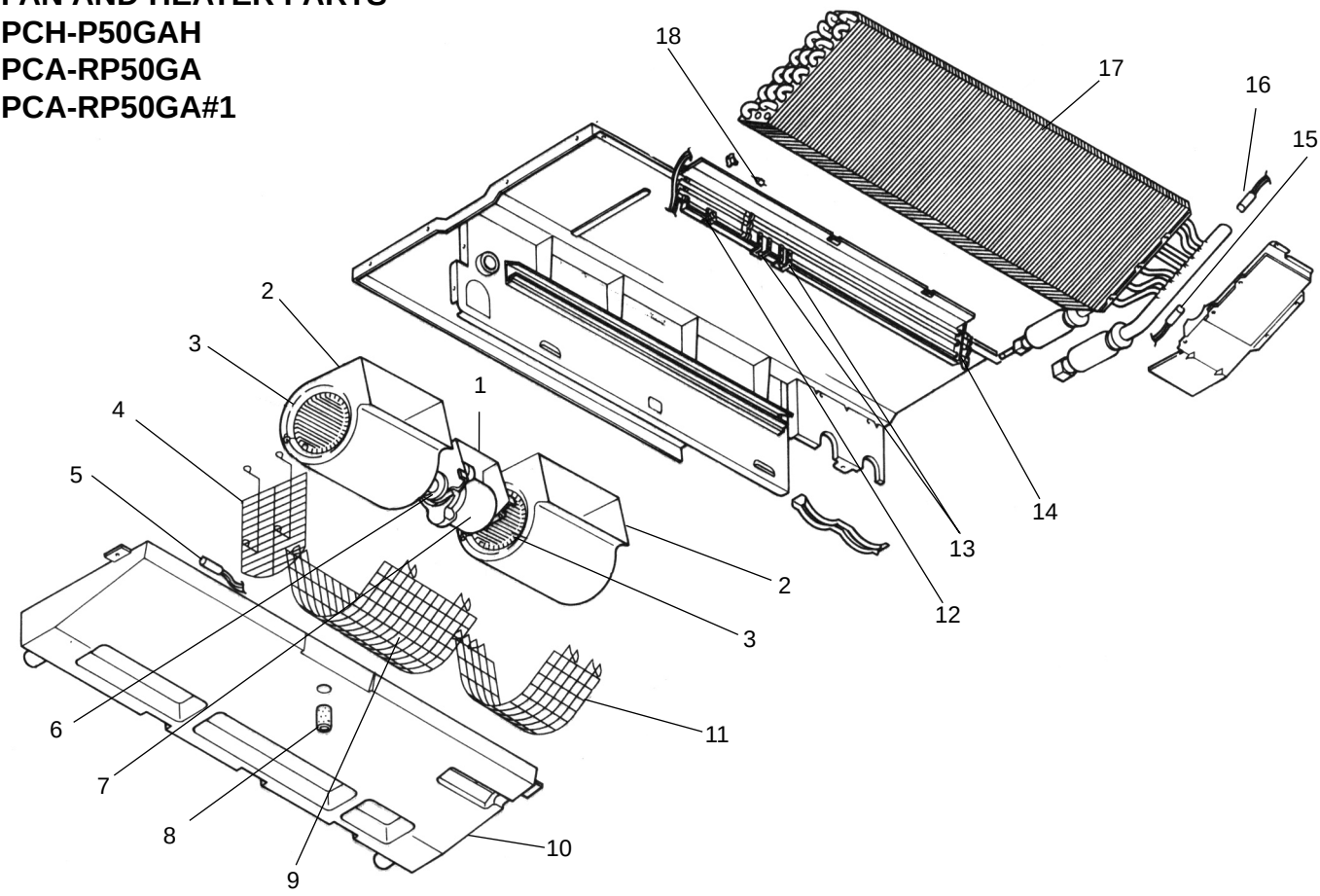

No.	RoHS	Parts No.	Parts Name	Specifications	Q'ty / set			Remarks (Drawing No.)	Wiring Diagram Symbol	Recom-mended Q'ty
					PCH-P	PCA-RP				
					50GAH	50GA	50GA#1			
1	G	R01 31J 130	MOTOR LEG		1	1	1			
2	G	R01 18J 110	CASING		2	2	2			
3	G	R01 E16 114	SIROCCO FAN		2	2	2			
4	G	T7W 31J 675	FAN GUARD		1	1	1			
5	G	R01 H08 202	ROOM TEMPERATURE THERMISTOR		1	1	1		TH1	
6	G	R01 45E 126	PIECE (MOTOR)		1	1	1			
7	G	R01 18J 220	FAN MOTOR	D09B4P54MS	1	1	1		MF	
8	G	R01 18J 524	DRAIN PLUG		1	1	1			
9	G	T7W 30J 675	FAN GUARD		1	1	1			
10	G	R01 E27 529	DRAIN PAN ASSY		1	1	1			
11	G	T7W 29J 675	FAN GUARD		1	1	1			
12	G	R01 E13 700	THERMAL SWITCH	OFF:50℃ ON:35℃	1				26H	
13	G	R01 21J 303	INSULATOR		3					
	G	R01 31J 303	INSULATOR		1					
14	G	T7W E21 300	HEATER ELEMENT	80V 467W	3				H1	
15	G	R01 H10 202	PIPE TEMPERATURE THERMISTOR		1	1	1		TH2	
16	G	R01 H09 202	CONDENSER / EVAPORATOR TEMPERATURE THERMISTOR		1	1	1		TH5	
17	G	R01 N08 480	HEAT EXCHANGER		1					
	G	T7W H41 480	HEAT EXCHANGER			1	1			
18	G	R01 P03 706	THERMAL FUSE	250V 98℃ 10A	1				FS1,2	

FAN AND HEATER PARTS
PCA-RP50GA2
PCA-RP50GA2#1
PCA-RP60GA
PCA-RP71GA
PCA-RP60GA#1
PCA-RP71GA#1
PCH-P60GAH
PCH-P71GAH

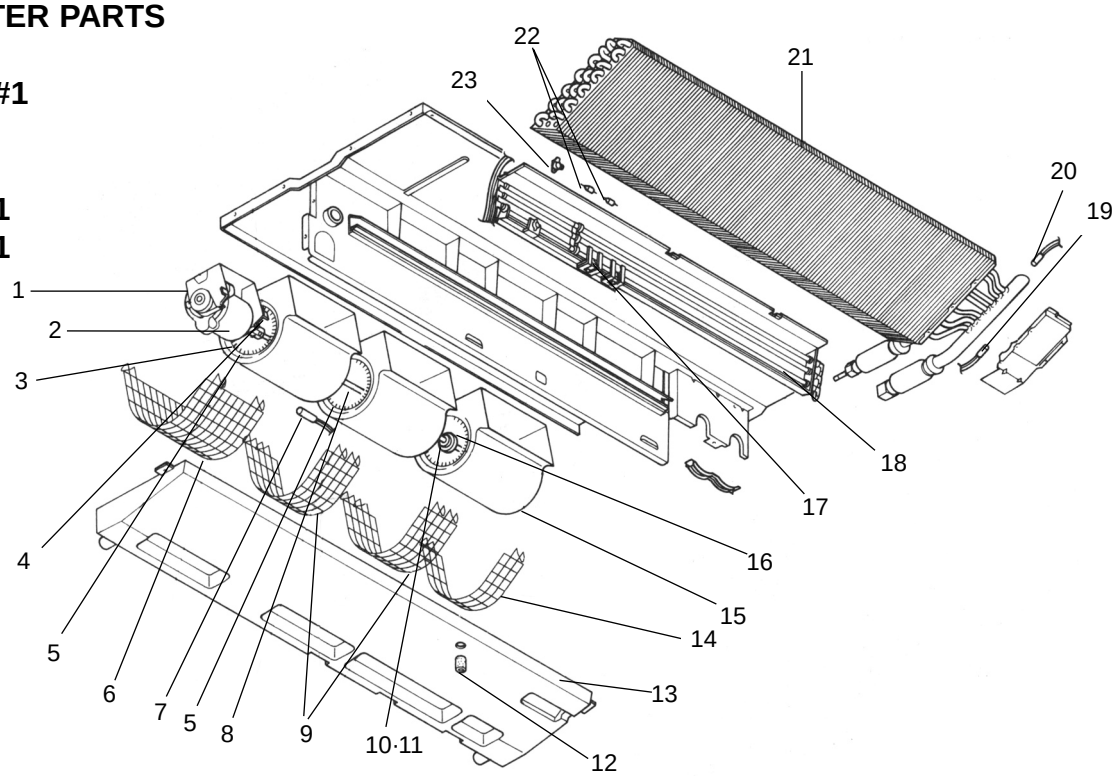

No.	RoHS	Parts No.	Parts Name	Specifications	Q'ty / set					Remarks (Drawing No.)	Wiring Diagram Symbol	Recom-mended Q'ty
					PCH- P		PCA- RP					
					60GAH	71GAH	50GA2 50GA2#1	60GA 60GA#1	71GA 71GA#1			
1	G	R01 30J 130	MOTOR LEG		1	1	1	1	1			
2	G	T7W 40J 762	FAN MOTOR	DO9C4P70MS	1	1	1	1	1		MF	
3	G	R01 800 116	SHAFT JOINT		1	1	1	1	1			
4	G	R01 45E 126	PIECE (MOTOR)		1	1	1	1	1			
5	G	R01 E17 114	SIROCCO FAN		2	2	2	2	2			
6	G	T7W 29J 675	FAN GUARD		1	1	1	1	1			
7	G	R01 H08 202	ROOM TEMPERATURE THERMISTOR		1	1	1	1	1		TH1	
8	G	R01 30J 100	SHAFT (FAN)		1	1	1	1	1			
9	G	T7W 28J 675	FAN GUARD		2	2	2	2	2			
10	G	R01 E02 103	SLEEVE BEARING		1	1	1	1	1			
11	G	R01 30J 145	BEARING SUPPORT		1	1	1	1	1			
12	G	R01 18J 524	DRAIN PLUG		1	1	1	1	1			
13	G	R01 A18 529	DRAIN PAN ASSY		1	1	1	1	1			
14	G	T7W 27J 675	FAN GUARD		1	1	1	1	1			
15	G	R01 18J 110	CASING		3	3	3	3	3			
16	G	R01 E15 114	SIROCCO FAN		1	1	1	1	1			
17	G	R01 31J 303	INSULATOR		1	1						
	G	R01 40J 303	INSULATOR		3	3						
18	G	T7W E11 300	HEATER ELEMENT	80V 700W	3	3					H1	
19	G	R01 H10 202	PIPE TEMPERATURE THERMISTOR		1	1	1	1	1		TH2	
20	G	R01 H09 202	CONDENSER / EVAPORATOR TEMPERATURE THERMISTOR		1	1	1	1	1		TH5	
21	G	R01 J66 480	HEAT EXCHANGER		1	1			1			
	G	T7W H42 480	HEAT EXCHANGER					1				
	G	T7W H37 480	HEAT EXCHANGER				1					
22	G	T7W 25J 706	THERMAL FUSE	110℃ 16A 250V	1	1					FS1,2	
23	G	R01 E13 700	THERMAL SWITCH	OFF:50℃ ON:35℃	1	1					26H	

FAN AND HEATER PARTS
PCH-P100GAH
PCA-RP100GA
PCA-RP100GA#1

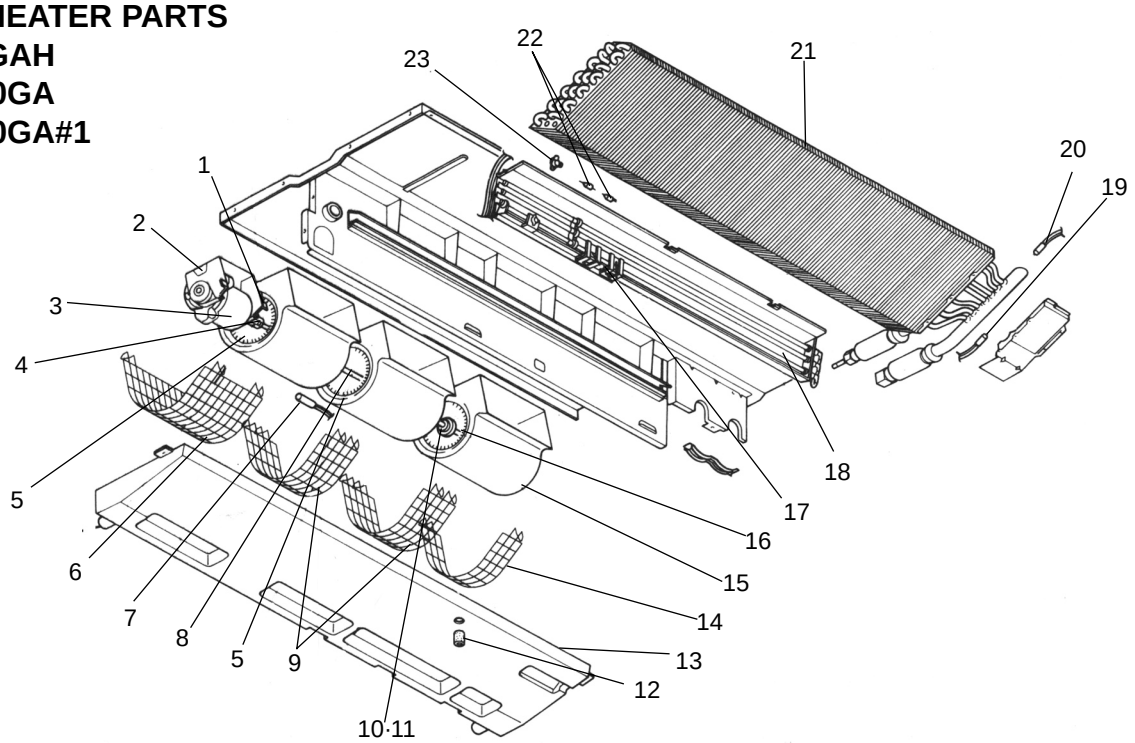

No.	RoHS	Parts No.	Parts Name	Specifications	Q'ty / set			Remarks (Drawing No.)	Wiring Diagram Symbol	Recom-mended Q'ty
					PCH-P	PCA-RP				
					100GAH	100GA	100GA#1			
1	G	R01 45E 126	PIECE (MOTOR)		1	1	1			
2	G	R01 32J 130	MOTOR LEG		1	1	1			
3	G	R01 19J 220	FAN MOTOR	D10B4P90MS	1	1	1		MF	
4	G	R01 800 116	SHAFT JOINT		1	1	1			
5	G	R01 E19 114	SIROCCO FAN		2	2	2			
6	G	T7W 35J 675	FAN GUARD		1	1	1			
7	G	R01 H08 202	ROOM TEMPERATURE THERMISTOR		1	1	1		TH1	
8	G	R01 30J 100	SHAFT		1	1	1			
9	G	T7W 34J 675	FAN GUARD		2	2	2			
10	G	R01 E02 103	SLEEVE BEARING		1	1	1			
11	G	R01 36J 145	BEARING SUPPORT		1	1	1			
12	G	R01 18J 524	DRAIN PLUG		1	1	1			
13	G	R01 E28 529	DRAIN PAN ASSY		1	1	1			
14	G	T7W 32J 675	FAN GUARD		1	1	1			
15	G	R01 19J 110	CASING		3	3	3			
16	G	R01 E20 114	SIROCCO FAN		1	1	1			
17	G	R01 31J 303	INSULATOR		1					
	G	R01 41J 303	INSULATOR		3					
18	G	T7W E22 300	HEATER ELEMENT	80V 900W	3				H1	
19	G	R01 H10 202	PIPE TEMPERATURE THERMISTOR		1	1	1		TH2	
20	G	R01 H09 202	CONDENSER / EVAPORATOR TEMPERATURE THERMISTOR		1	1	1		TH5	
21	G	R01 N09 480	HEAT EXCHANGER		1					
	G	T7W H43 480	HEAT EXCHANGER			1	1			
22	G	T7W 11G 706	THERMAL FUSE	117℃ 16A 250V	1				FS1,2	
23	G	R01 E13 700	THERMAL SWITCH	OFF:50℃ ON:35℃	1				26H	

FAN AND HEATER PARTS
PCA-RP125GA
PCA-RP140GA
PCA-RP125GA#1
PCA-RP140GA#1
PCH-P125GAH
PCH-P140GAH

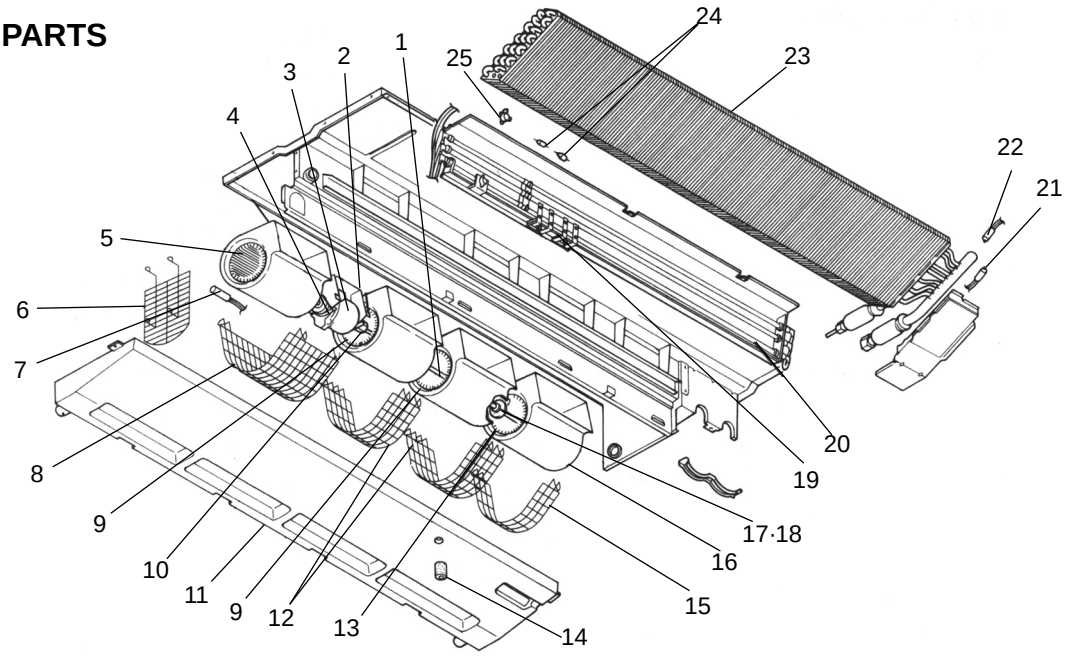

No.	RoHS	Parts No.	Parts Name	Specifications	Q'ty / set				Remarks (Drawing No.)	Wiring Diagram Symbol	Recom-mended Q'ty
					PCH- P		PCA- RP				
					125GAH	140GAH	125GA 125GA#1	140GA 140GA#1			
1	G	R01 30J 100	SHAFT		1	1	1	1			
2	G	R01 33J 130	MOTOR LEG		1	1	1	1			
3	G	R01 20J 220	FAN MOTOR	D10B4P150MS	1	1	1	1		MF	
4	G	R01 45E 126	PIECE (MOTOR)		1	1	1	1			
5	G	R01 E18 114	SIROCCO FAN		1	1	1	1			
6	G	T7W 35J 675	FAN GUARD		1	1	1	1			
7	G	R01 H08 202	ROOM TEMPERATURE THERMISTOR		1	1	1	1		TH1	
8	G	T7W 33J 675	FAN GUARD		1	1	1	1			
9	G	R01 E19 114	SIROCCO FAN		2	2	2	2			
10	G	R01 800 116	SHAFT JOINT		1	1	1	1			
11	G	R01 E29 529	DRAIN PAN ASSY		1	1	1	1			
12	G	T7W 34J 675	FAN GUARD		2	2	2	2			
13	G	R01 E20 114	SIROCCO FAN		1	1	1	1			
14	G	R01 18J 524	DRAIN PLUG		1	1	1	1			
15	G	T7W 36J 675	FAN GUARD		1	1	1	1			
16	G	R01 19J 110	CASING		4	4	4	4			
17	G	R01 E02 103	SLEEVE BEARING		1	1	1	1			
18	G	R01 36J 145	BEARING SUPPORT		1	1	1	1			
19	G	R01 31J 303	INSULATOR		1	1					
	G	R01 41J 303	INSULATOR		6	6					
20	G	T7W E12 300	HEATER ELEMENT	80V 1000W	3	3				H1	
21	G	R01 H10 202	PIPE TEMPERATURE THERMISTOR		1	1	1	1		TH2	
22	G	R01 H09 202	CONDENSER / EVAPORATOR TEMPERATURE THERMISTOR		1	1	1	1		TH5	
23	G	T7W H44 480	HEAT EXCHANGER				1				
	G	T7W H45 480	HEAT EXCHANGER					1			
	G	T7W H46 480	HEAT EXCHANGER		1						
	G	T7W H47 480	HEAT EXCHANGER			1					
24	G	T7W 25J 706	THERMAL FUSE	110℃ 16A 250V	1	1				FS1,2	
25	G	R01 E13 700	THERMAL SWITCH	OFF:50℃ ON:35℃	1	1				26H	

STRUCTURAL PART
PCA-RP50GA
PCA-RP50GA#1
PCH-P50GAH

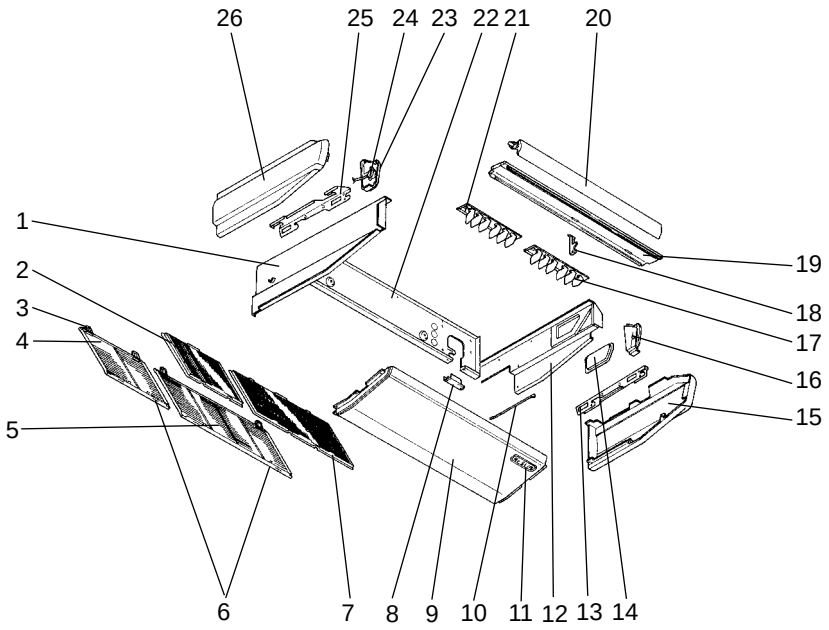

Part numbers that are circled are not shown in the figure.

No.	RoHS	Parts No.	Parts Name	Specifications	Q'ty/set PCA-RP50GA PCH-P50GAH	Q'ty/set PCA-RP50GA#1	Remarks (Drawing No.)	Wiring Diagram Symbol	Recom-mended Q'ty
1	G	R01 E00 666	S.PLATE-L		1	1			
2	G	R01 A30 500	L.L FILTER		1	1			
3	G	R01 18J 061	GRILLE HINGE		4	4			
4	G	R01 20J 691	GRILLE ASSY		1	1			
5	G	R01 19J 691	GRILLE ASSY		1	1			
6	G	R01 19J 054	GRILLE CATCH		4	4			
7	G	R01 A29 500	L.L FILTER		1	1			
8	G	—	REAR SUPPORT		1	1	(BG02H454K01)		
9	G	R01 31J 669	UNDER PANEL		1	1			
10	G	—	BEAM(GA)		2	2	(BG17H464H08)		
11	G	T7W E02 070	W.BOARD CASE		1	1			
12	G	R01 19J 665	S.PLATE-R		1	1			
13	G	R01 18J 808	RIGHT LEG (R)		1	1			
14	G	R01 19J 668	SERVICE PANEL		1	1			
15	G	R01 18J 661	RIGHT SIDE PANEL		1	1			
16	G	R01 18J 067	RIGHT SIDE BOX		1	1			
17	G	R01 38J 085	G.V ASSY-6R		1	1			
18	G	R01 E02 033	VANE SUPPORT		1	1			
19	G	R01 37J 651	FRONT PANEL		1	1			
20	G	R01 31J 002	AUTO VANE		1	1			
21	G	R01 38J 086	G.V ASSY-6L		1	1			
22	G	R01 A18 676	REAR PANEL		1	1			
23	G	R01 18J 068	LEFT SIDE BOX		1	1			
24	G	R01 E11 223	VANE MOTOR		1	1		MV	
25	G	R01 18J 809	LEFT LEG (L)		1	1			
26	G	R01 18J 662	LEFT SIDE PANEL		1	1			
(27)	G	R01 18J 523	JOINT SOCKET		1	1			
(28)	G	T7W E01 072	DRAIN HOSE COVER		1				
	G	R01 18J 072	DRAIN HOSE COVER			1			

STRUCTURAL PART
PCA-RP50GA2
PCA-RP50GA2#1
PCA-RP60GA
PCA-RP71GA
PCA-RP100GA
PCA-RP60GA#1
PCA-RP71GA#1
PCA-RP100GA#1
PCH-P60GAH
PCH-P71GAH
PCH-P100GAH

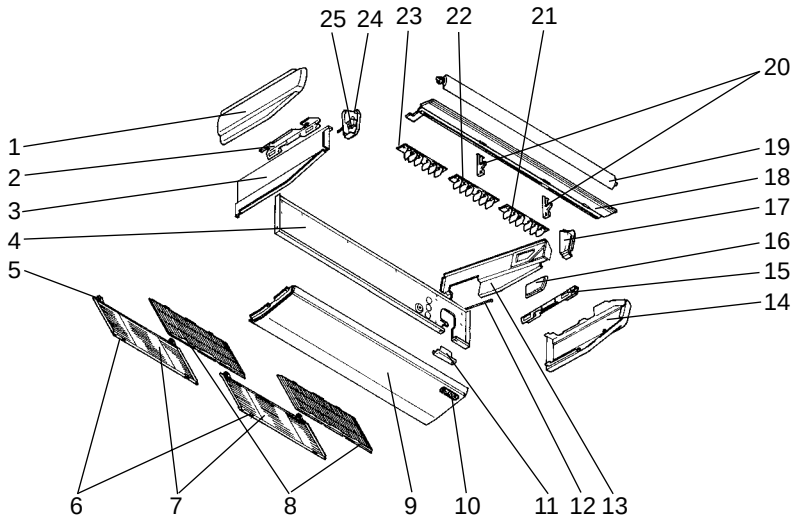

Part numbers that are circled are not show in the figure.

No.	RoHS	Parts No.	Parts Name	Specifi-cations	Q'ty/set PCA-RP/PCH-P 50 GA2	50 GA2#1	60/71 GA/GAH	60/71 GA#1	100 GA/GAH	100 GA#1	Remarks (Drawing No.)	Wiring Diagram Symbol	Recom-mended Q'ty
1	G	R01 18J 662	LEFT SIDE PANEL		1	1	1	1					
	G	R01 36J 662	LEFT SIDE PANEL						1	1			
2	G	R01 18J 809	LEFT LEG		1	1	1	1	1	1			
3	G	R01 E00 666	S.PLATE-L		1	1	1	1					
	G	R01 E01 666	S.PLATE-L						1	1			
4	G	R01 30J 676	REAR PANEL		1	1	1	1					
	G	R01 A21 676	REAR PANEL						1	1			
5	G	R01 18J 061	GRILLE HINGE		4	4	4	4	4	4			
6	G	R01 19J 054	GRILLE CATCH		4	4	4	4	4	4			
7	G	R01 19J 691	GRILLE ASSY		2	2	2	2	2	2			
8	G	R01 A29 500	L.L FILTER		2	2	2	2	2	2			
9	G	R01 30J 669	UNDER PANEL		1	1	1	1	1	1			
10	G	T7W E02 070	W.BOARD CASE		1	1	1	1	1	1			
11	G	—	REAR SUPPORT		1	1	1	1	1	1	(BG02H454K01)		
12	G	—	BEAM (GA)		2	2	2	2	2	2	(BG17H464H08)		
13	G	R01 19J 665	S.PLATE-R		1	1	1	1					
	G	R01 E01 665	S.PLATE-R						1	1			
14	G	R01 18J 661	RIGHT SIDE PANEL		1	1	1	1					
	G	R01 36J 661	RIGHT SIDE PANEL						1	1			
15	G	R01 18J 808	RIGHT LEG		1	1	1	1	1	1			
16	G	R01 19J 668	SERVICE PANEL		1	1	1	1					
	G	R01 20J 668	SERVICE PANEL						1	1			
17	G	R01 18J 067	RIGHT SIDE BOX		1	1	1	1					
	G	R01 36J 067	RIGHT SIDE BOX						1	1			
18	G	R01 30J 651	FRONT PANEL		1	1	1	1					
	G	R01 38J 651	FRONT PANEL						1	1			
19	G	R01 30J 002	AUTO VANE		1	1	1	1					
	G	R01 E14 002	AUTO VANE						1	1			
20	G	R01 E02 033	VANE SUPPORT		2	2	2	2					
	G	R01 E03 033	VANE SUPPORT						2	2			
21	G	R01 38J 085	G.V ASSY-6R		1	1	1	1	1	1			
22	G	R01 38J 087	G.V ASSY-6C		1	1	1	1	1	1			
23	G	R01 38J 086	G.V ASSY-6L		1	1	1	1	1	1			
24	G	R01 18J 068	LEFT SIDE BOX		1	1	1	1					
	G	R01 E01 068	LEFT SIDE BOX						1	1			
25	G	R01 E10 223	VANE MOTOR		1	1	1	1				MV	
	G	R01 E12 223	VANE MOTOR						1	1		MV	
㉖	G	R01 18J 523	JOINT SOCKET		1	1	1	1	1	1			
㉗	G	T7W E01 072	DRAIN HOSE COVER		1		1		1				
	G	R01 18J 072	DRAIN HOSE COVER			1		1		1			

STRUCTURAL PART
PCA-RP125GA
PCA-RP140GA
PCA-RP125GA#1
PCA-RP140GA#1
PCH-P125GAH
PCH-P140GAH

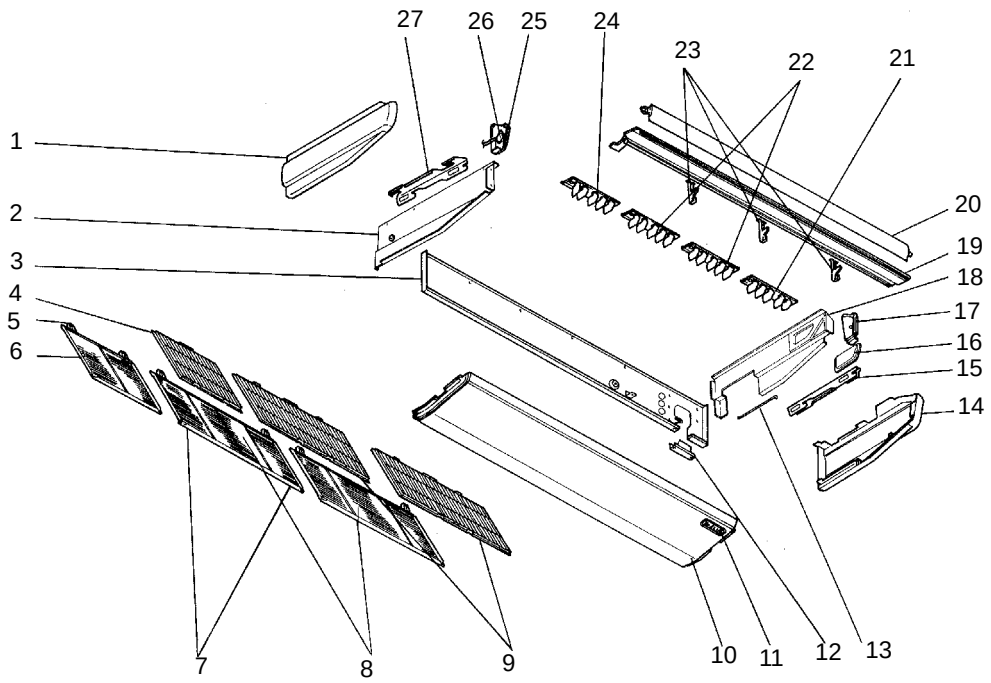

Part numbers that are circled are not shown in the figure.

No.	RoHS	Parts No.	Parts Name	Specifications	Q'ty/set PCA-RP125/140GA PCH-P125/140GAH	Q'ty/set PCA-RP125/140GA#1	Remarks (Drawing No.)	Wiring Diagram Symbol	Recom-mended Q'ty
1	G	R01 36J 662	LEFT SIDE PANEL		1	1			
2	G	R01 E01 666	S.PLATE-L		1	1			
3	G	R01 A19 676	REAR PANEL		1	1			
4	G	R01 A30 500	L.L FILTER		1	1			
5	G	R01 18J 061	GRILLE HINGE		6	6			
6	G	R01 20J 691	GRILLE ASSY		1	1			
7	G	R01 19J 054	GRILLE CATCH		6	6			
8	G	R01 19J 691	GRILLE ASSY		2	2			
9	G	R01 A29 500	L.L FILTER		2	2			
10	G	R01 32J 669	UNDER PANEL		1	1			
11	G	T7W E02 070	W.BOARD CASE		1	1			
12	G	—	REAR SUPPORT		1	1	(BG02H454K01)		
13	G	—	BEAM (GA)		3	3	(BG17H464H08)		
14	G	R01 36J 661	RIGHT SIDE PANEL		1	1			
15	G	R01 18J 808	RIGHT LEG		1	1			
16	G	R01 20J 668	SERVICE PANEL		1	1			
17	G	R01 36J 067	RIGHT SIDE BOX		1	1			
18	G	R01 E01 665	S.PLATE-R		1	1			
19	G	R01 39J 651	FRONT PANEL		1	1			
20	G	R01 E15 002	AUTO VANE		1	1			
21	G	R01 39J 085	G.V ASSY-5R		1	1			
22	G	R01 39J 087	G.V ASSY-5C		2	2			
23	G	R01 E03 033	VANE SUPPORT		3	3			
24	G	R01 39J 086	G.V ASSY-5L		1	1			
25	G	R01 E01 068	LEFT SIDE BOX		1	1			
26	G	R01 E12 223	VANE MOTOR		1	1		MV	
27	G	R01 18J 809	LEFT LEG		1	1			
㉘	G	R01 18J 523	JOINT SOCKET		1	1			
㉙	G	T7W E01 072	DRAIN HOSE COVER		1				
	G	R01 18J 072	DRAIN HOSE COVER			1			

ELECTRICAL PARTS
PCA-RP50/60/71/100/125/140GA
PCA-RP50/60/71/100/125/140GA#1
PCA-RP50GA2
PCA-RP50GA2#1

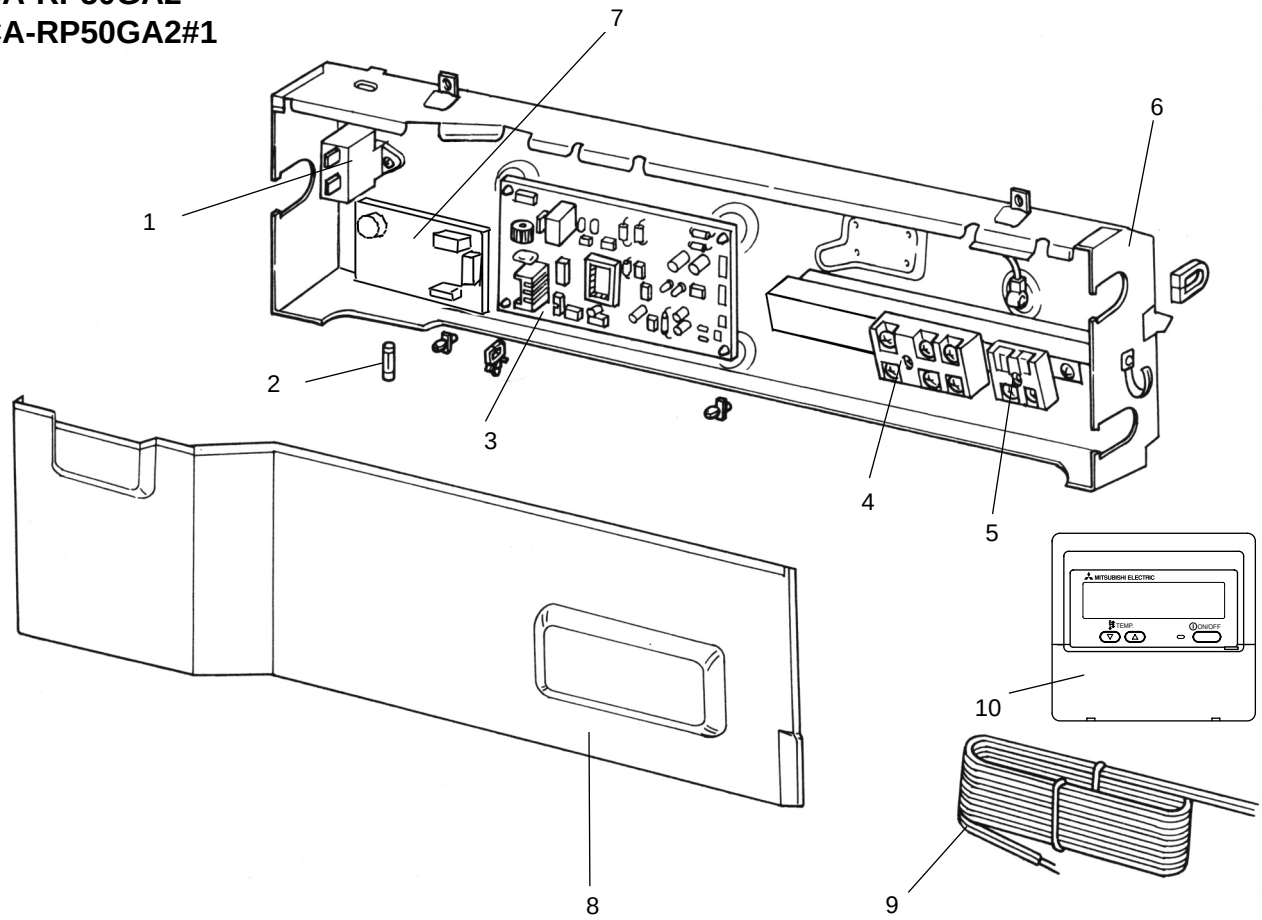

No.	RoHS	Parts No.	Parts Name	Specifications	PCA-RP 50 GA	PCA-RP 60/71 GA	PCA-RP 100 GA	PCA-RP 125/140 GA	PCA-RP 50 GA#1	PCA-RP 60/71 GA#1	PCA-RP 100 GA#1	PCA-RP 125/140 GA#1	PCA-RP 50 GA2	PCA-RP 50 GA2#1	Remarks (Drawing No.)	Wiring Diagram Symbol	Recom-mended Q'ty
1	G	R01 A15 255	CAPACITOR	3μF 440V	1				1							C	
	G	T7W E13 255	CAPACITOR	4μF 440V		1	1			1	1		1	1		C	
	G	R01 A14 255	CAPACITOR	6μF 440V				1				1				C	
2	G	R01 E06 239	FUSE	250V 6.3A	1	1	1	1	1	1	1	1	1	1		FUSE	
3	G	T7W E50 310	INDOOR CONTROLLER BOARD		1	1	1	1					1			I.B	
	G	T7W E73 310	INDOOR CONTROLLER BOARD						1	1	1	1		1		I.B	
4	G	R01 E20 246	TERMINAL BLOCK	3P(S1,S2,S3)	1	1	1	1	1	1	1	1	1	1		TB4	
5	G	T7W E33 716	TERMINAL BLOCK	2P(1,2)	1	1	1	1	1	1	1	1	1	1		TB5	
6	G	—	CONTROL BOX		1	1	1	1	1	1	1	1	1	1	(BG00N015G40)		
7	G	R01 E38 313	POWER BOARD		1	1	1	1	1	1	1	1	1	1		P.B	
8	G	—	CONTROL COVER		1				1						(BG02A804G38)		
	G	—	CONTROL COVER			1		1		1		1	1	1	(BG02A804G39)		
	G	—	CONTROL COVER				1				1				(BG02A804G40)		
9	G	T7W A01 305	REMOTE CONTROLLER CORD	10m	1	1	1	1	1	1	1	1	1	1			
10	G	T7W E11 713	REMOTE CONTROLLER	PAR-21MAA	1	1	1	1	1	1	1	1	1	1		R.B	

ELECTRICAL PARTS
PCH-P50GAH, PCH-P100GAH
PCH-P60GAH, PCH-P125GAH
PCH-P71GAH, PCH-P140GAH

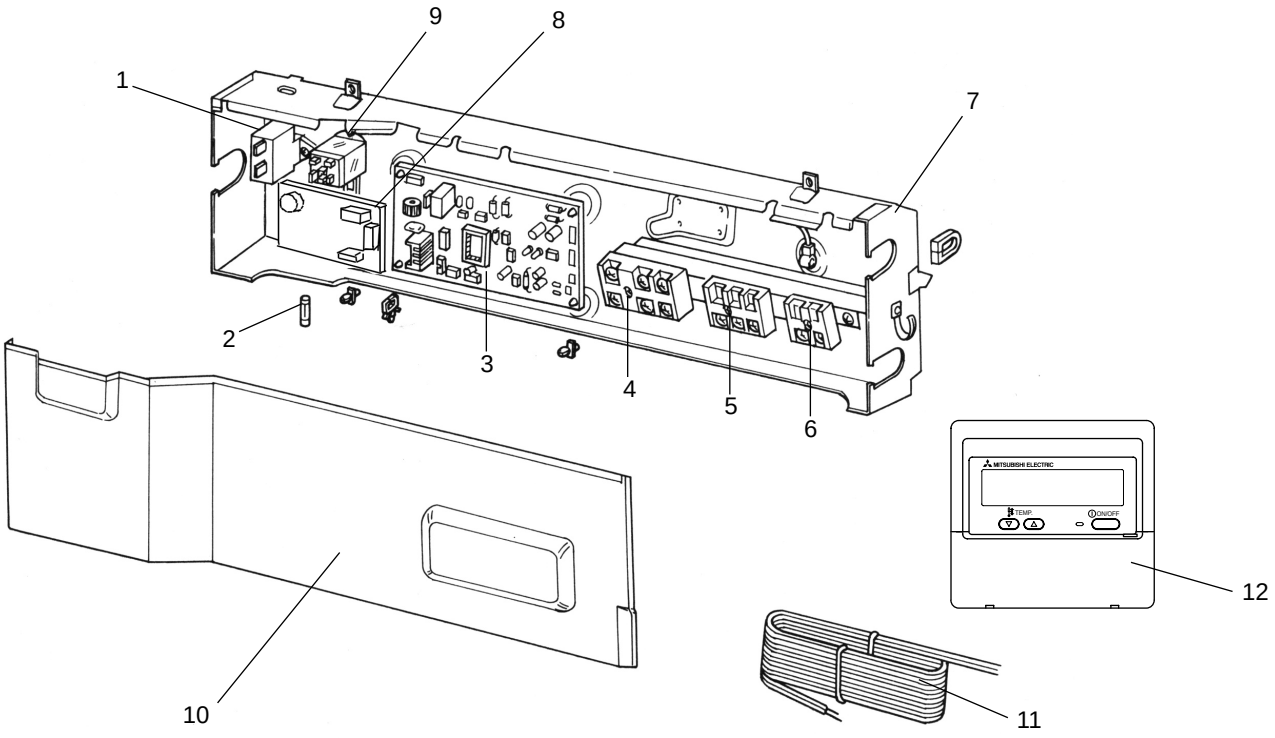

No.	RoHS	Parts No.	Parts Name	Specifications	Q'ty / set PCH-P 50 GAH	60/71 GAH	100 GAH	125/140 GAH	Remarks (Drawing No.)	Wiring Diagram Symbol	Recom-mended Q'ty
1	G	R01 A15 255	CAPACITOR	3μF 440V	1					C	
	G	T7W E13 255	CAPACITOR	4μF 440V		1	1			C	
	G	R01 A14 255	CAPACITOR	6μF 440V				1		C	
2	G	R01 E06 239	FUSE	250V 6.3A	1	1	1	1		FUSE	
3	G	T7W E50 310	INDOOR CONTROLLER BOARD		1	1	1	1		I.B	
4	G	T7W E32 716	TERMINAL BLOCK	3P (L,N, ⏚)	1	1	1	1		TB2	
5	G	R01 E20 246	TERMINAL BLOCK	3P (S1,S2,S3)	1	1	1	1		TB4	
6	G	T7W E33 716	TERMINAL BLOCK	2P (1,2)	1	1	1	1		TB5	
7	G	—	CONTROL BOX		1	1	1	1	(BG00N015G42)		
8	G	R01 E38 313	POWER BOARD		1	1	1	1		P.B	
9	G	R01 E03 215	RELAY	JC-1A DC12V	1	1	1	1		88H	
10	G	—	CONTROL COVER		1				(BG02A804G38)		
	G	—	CONTROL COVER			1		1	(BG02A804G39)		
	G	—	CONTROL COVER				1		(BG02A804G40)		
11	G	T7W A01 305	REMOTE CONTROLLER CORD	10m	1	1	1	1			
12	G	T7W E11 713	REMOTE CONTROLLER	PAR-21MAA	1	1	1	1		R.B	

Mr.SLIM™

MITSUBISHI ELECTRIC CORPORATION
HEAD OFFICE : TOKYO BLDG., 2-7-3, MARUNOUCHI, CHIYODA-KU, TOKYO 100-8310, JAPAN

Distributed in May 2008 No.OC328 REVISED EDITION-B PDF 7
Distributed in Jun . 2006 No.OC328 REVISED EDITION-A PDF 8
Distributed in May. 2005 No.OC328 PDF 9
Made in Japan

New publication, effective May 2008
Specifications subject to change without notice