Changes for the Better

SERVICE PARTS LIST FOR MITSUBISHI ELECTRIC PACKAGED AIR-CONDITIONERS

Series : PQY-P•YGM-A

For use with the R410A

REVISED

June 2006

BWE0515A

INDEX
PQY-P01YGM-A

MITSUBISHI ELECTRIC

Please change the old catalog (issued July 2005, No.BWE05150) to this new catalog.
Content of revision : Some of parts are changed.

EXTERNAL PARTS

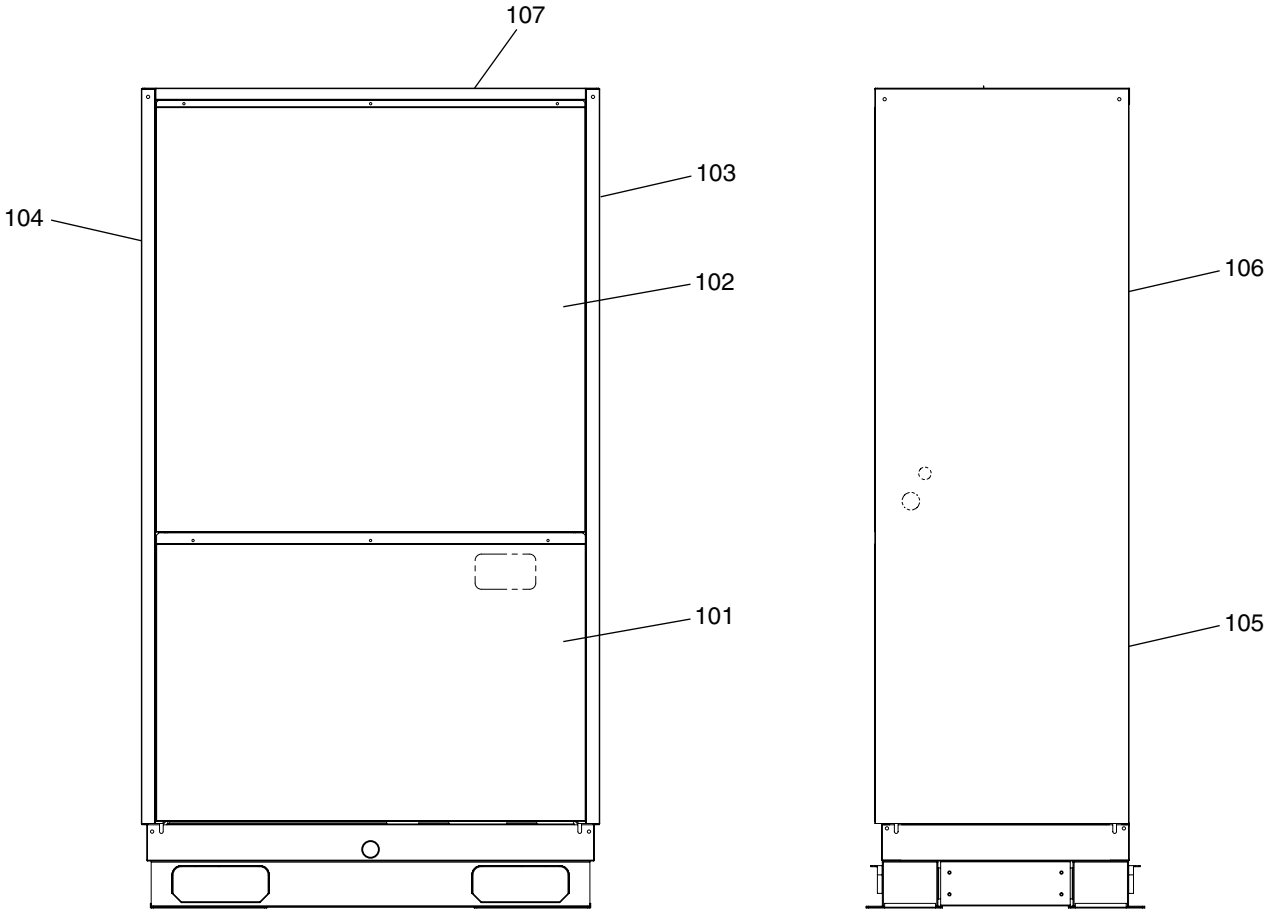

No.	Part No.	RoHS Compliant : G	Part Name	Spec.	PQY-P01YGM-A				Dwg. No.	Price	Revision History
101	R63 4F3 651	G	Front panel 1 assy		1						A
102	R63 4F3 652	G	Front panel 2 assy		1						A
103	R63 4F3 661	G	Side panel R assy		1						A
104	R63 9F4 661	G	Side panel L assy		1						A
105	R63 4F3 678	G	Rear panel 1 assy		1						A
106	R63 4F3 676	G	Rear panel 2 assy		1						A
107	R63 9F4 642	G	Top panel		1						A

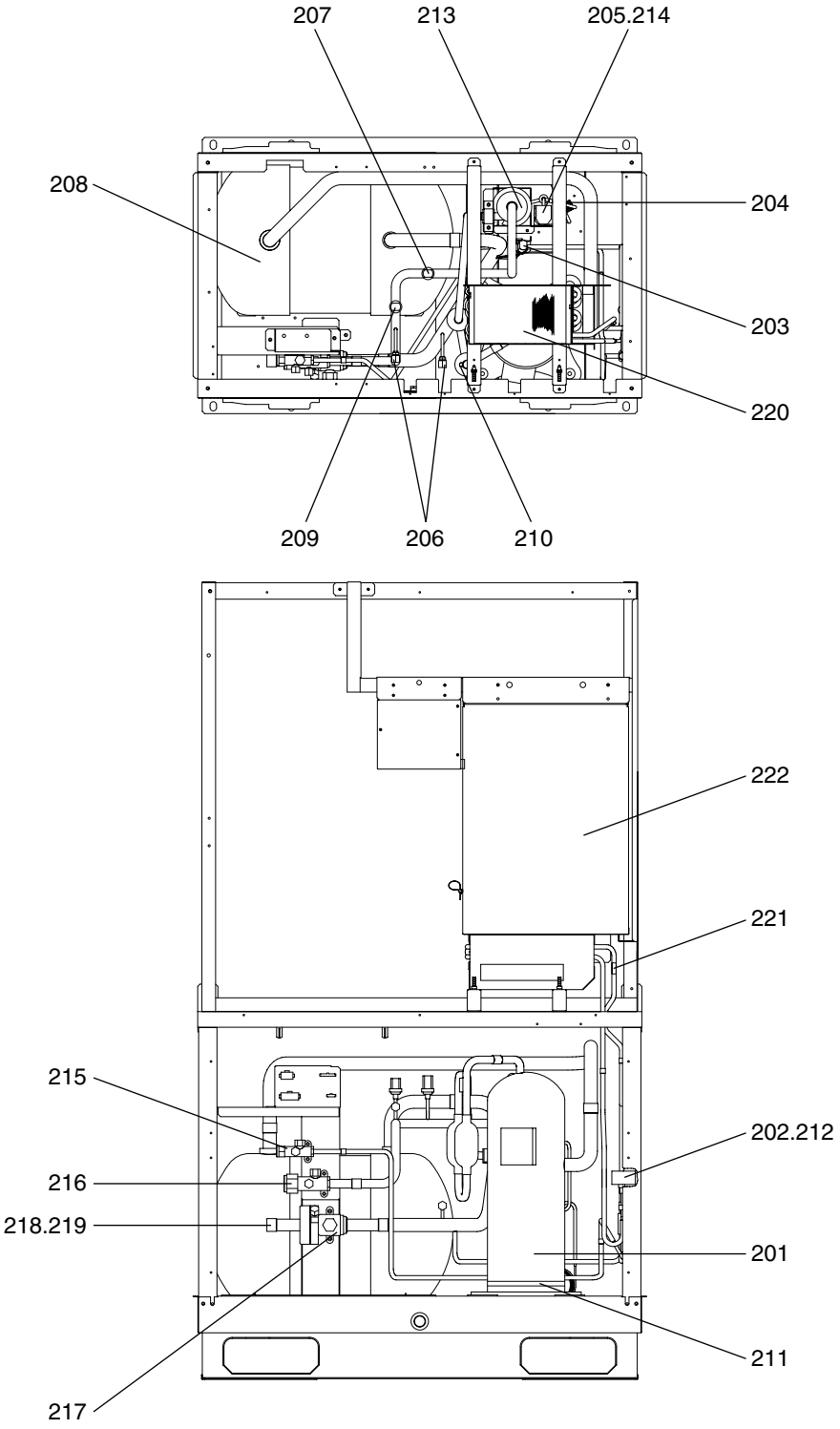
207
213
205.214
208
204
203
220
209
206
210
222
221
215
202.212
216
218.219
201
211
217

No.	Part No.	RoHS Compliant : G	Part Name	Spec.	PQY-P01YGM-A				Dwg. No.	Price	Revision History
201	R66 A44 478	G	Scroll compressor	HNB71FA-YBE <MC>	1						A
202	R63 R34 401	G	Linear expansion valve	CAM35	1						A
203	R63 R37 288	G	Pressure sensor	<63LS>	1						A
204	R63 R34 425	G	Capillary tube assy		1						A
205	R63 R34 232	G	Solenoid valve	<SV1>	1						A
206	R63 R34 413	G	Check joint		2						A
207	R63 R34 288	G	Pressure sensor	<63HS>	1						A
208	R63 Y54 484	G	Accumulator assy		1						A
209	R63 Y11 208	G	Pressure switch	<63H>	1						A
210	R63 911 202	G	Thermistor	<TH11>	1						A
211	R63 Y11 237	G	Belt heater	<CH1>	1						A
212	R63 4F3 401	G	Solenoid valve coil	<LEV2>	1						A
213	R63 9F4 487	G	Oil separator assy		1						A
214	R63 Y17 243	G	Solenoid valve coil	<SV1>	1						A
215	R63 R37 410	G	Ball valve		1						A
216	R63 R34 410	G	Ball valve		1						A
217	R63 R40 410	G	Ball valve		1						A
218	R61 F14 514	G	Packing		1						A
219	R63 9F2 442	G	Pipe assy		1						A
220	R63 4F3 480	G	Heat exchanger		1						A
221	R63 670 202	G	Thermistor	NTH3A14 <1NV>	1						A
222	R63 Y50 305	G	Control box	W-P01YGM	1						A

CONTROL BOX PARTS

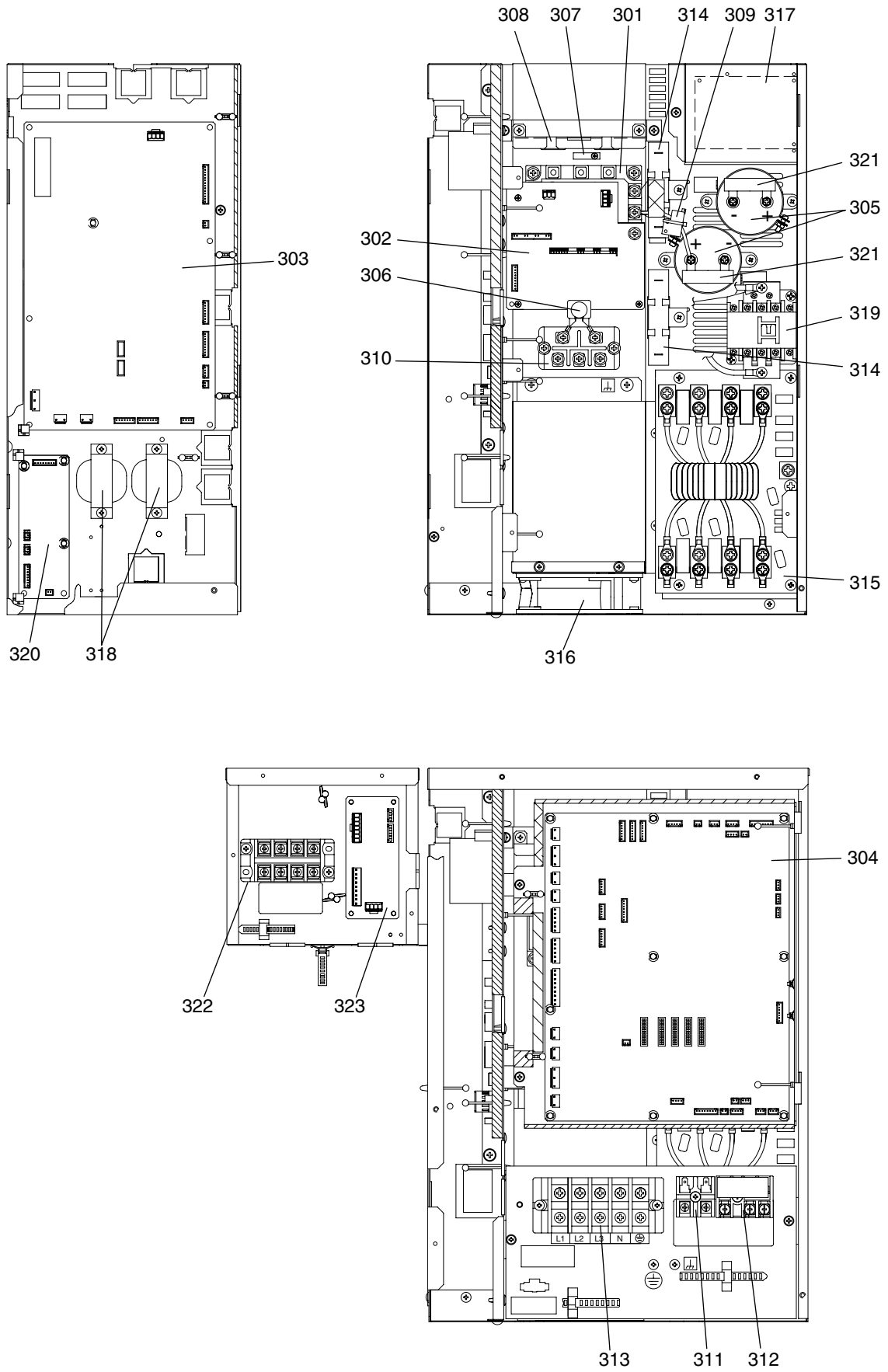

No.	Part No.	RoHS Compliant : G	Part Name	Spec.	PQY-P01YGM-A				Dwg. No.	Price	Revision History
301	R63 Y04 249	G	IPM (Power module)	6MBP50RA120	1						A
302	R63 Y43 280	G	G/A board		1						A
303	R63 Y25 321	G	INV board		1						A
304	R63 Y73 281	G	Main board		1						A
305	R63 R34 252	G	Capacitor	400V 3300μF <C1,C2>	2						A
306	R63 L85 252	G	Capacitor assy	<ZNR4>	1						A
307	R63 F14 201	G	Thermistor	<THHS>	1						A
308	R63 N79 289	G	AC current sensor	CHJ038CP2B<ACCT>	1						A
309	R63 A42 289	G	DC current sensor	<DCCT>	1						A
310	R63 Y12 320	G	Diode	DF60LB160 <DS>	1						A
311	R63 435 246	G	Terminal block	<TB3>	1						A
312	R63 979 247	G	Terminal block	<TB7>	1						A
313	R63 Y06 246	G	Terminal block	<TB1>	1						A
314	R63 Y06 234	G	Resistor	40W, 47Ω <R1,R2>	2						A
315	R63 Y14 293	G	Noise filter	<ACNF>	1						A
316	R63 Y02 300	G	Fan	109S025UL <MF1>	1						A
317	R63 Y04 259	G	Reactor	<DCL>	1						A
318	R63 R40 259	G	Choke coil	12mH 2A <L1,L2>	2						A
319	R63 Y28 225	G	Magnet contactor	PAK-21J, AC240V <52C>	1						A
320	R63 Y26 321	G	Filter board		1						A
321	R63 Y04 234	G	Resistor	<R3,R4>	2						A
322	R63 Y07 246	G	Terminal block	<TB8>	1						A
323	R63 Y55 280	G	Relay board		1						A

MITSUBISHI ELECTRIC CORPORATION
HEAD OFFICE: TOKYO BLDG., 2-7-3, MARUNOUCHI, CHIYODA-KU, TOKYO 100-8310, JAPAN

BWE0515A (20060630)