MITSUBISHI ELECTRIC

Changes for the Better

SPLIT-TYPE, HEAT PUMP AIR CONDITIONERS

December 2012

No. OCH442

REVISED EDITION-B

TECHNICAL & SERVICE MANUAL

Series PKFY Wall Mounted R410A

Indoor unit [Model names]	[Service Ref.]
PKFY-P32VHM-E	PKFY-P32VHM-E
	PKFY-P32VHM-ER1
	PKFY-P32VHM-ER2
PKFY-P40VHM-E	PKFY-P40VHM-E
	PKFY-P40VHM-ER1
	PKFY-P40VHM-ER2
PKFY-P50VHM-E	PKFY-P50VHM-E
	PKFY-P50VHM-ER1
	PKFY-P50VHM-ER2

Revision:
- PKFY-P32/40/50VHM-ER2 have been added in REVISED EDITION-B.
- Some descriptions have been modified.

- Plase void OCH442 REVISED EDITION-A.

Note:
- This manual describes only service data of the indoor units.
- RoHS compliant products have <G> mark on the spec name plate.

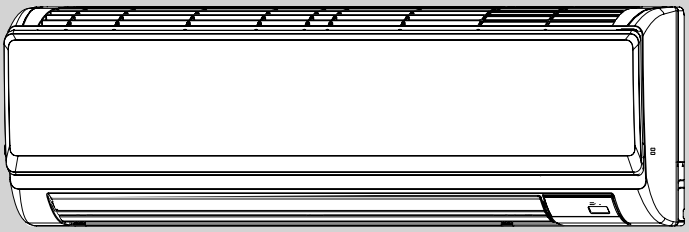

INDOOR UNIT

CONTENTS

1 TECHNICAL CHANGES

PKFY-P32VHM-ER1 ➔ PKFY-P32VHM-ER2
PKFY-P40VHM-ER1 ➔ PKFY-P40VHM-ER2
PKFY-P50VHM-ER1 ➔ PKFY-P50VHM-ER2

1. INDOOR CONTROLLER BOARD (I.B.) has been changed. (S/W version up)

PKFY-P32VHM-E ➔ PKFY-P32VHM-ER1
PKFY-P40VHM-E ➔ PKFY-P40VHM-ER1
PKFY-P50VHM-E ➔ PKFY-P50VHM-ER1

1. INDOOR CONTROLLER BOARD (I.B.) has been changed. (S/W version up)
2. Fan speed has been changed. (4 speed → 3 speed)
3. Heat exchanger has been changed.

PKFY-P32VHM-E
PKFY-P40VHM-E
PKFY-P50VHM-E

Service parts of room temp. thermistor (TH21) has been changed. (T7W E05 202 → R01 N20 202)
(The position to be attached has been changed. Band/PVC tube have been added.)

CAUTIONS RELATED TO NEW REFRIGERANT

Cautions for units utilizing refrigerant R410A

Do not use the existing refrigerant piping.

The old refrigerant and lubricant in the existing piping contains a large amount of chlorine which may cause the lubricant deterioration of the new unit.

Use “low residual oil piping”

If there is a large amount of residual oil (hydraulic oil, etc.) inside the piping and joints, deterioration of the lubricant will result.

Store the piping indoors, and both ends of the piping sealed until just before brazing. (Leave elbow joints, etc. in their packaging.)

If dirt, dust or moisture enters into refrigerant cycle, that can cause deterioration of refrigerant oil or malfunction of compressor.

The refrigerant oil applied to flare and flange connections must be ester oil, ether oil or alkylbenzene oil in a small amount.

If large amount of mineral oil enters, that can cause deterioration of refrigerant oil etc.

Charge refrigerant from liquid phase of gas cylinder.

If the refrigerant is charged from gas phase, composition change may occur in refrigerant and the efficiency will be lowered.

Do not use refrigerant other than R410A.

If other refrigerant (R22 etc.) is used, chlorine in refrigerant can cause deterioration of refrigerant oil etc.

Use a vacuum pump with a reverse flow check valve.

Vacuum pump oil may flow back into refrigerant cycle and that can cause deterioration of refrigerant oil etc.

Use the following tools specifically designed for use with R410A refrigerant.

The following tools are necessary to use R410A refrigerant.

Tools for R410A	
Gauge manifold	Flare tool
Charge hose	Size adjustment gauge
Gas leak detector	Vacuum pump adaptor
Torque wrench	Electronic refrigerant charging scale

Handle tools with care.

If dirt, dust or moisture enters into refrigerant cycle, that can cause deterioration of refrigerant oil or malfunction of compressor.

Do not use a charging cylinder.

If a charging cylinder is used, the composition of refrigerant will change and the efficiency will be lowered.

Use the specified refrigerant only.

Never use any refrigerant other than that specified.
Doing so may cause a burst, an explosion, or fire when the unit is being used, serviced, or disposed of.
Correct refrigerant is specified in the manuals and on the spec labels provided with our products.
We will not be held responsible for mechanical failure, system malfunction, unit breakdown or accidents caused by failure to follow the instructions.

Ventilate the room if refrigerant leaks during operation. If refrigerant comes into contact with a flame, poisonous gases will be released.

[1] Cautions for service

(1) Perform service after recovering the refrigerant left in unit completely.
(2) Do not release refrigerant in the air.
(3) After completing service, charge the cycle with specified amount of refrigerant.
(4) When performing service, install a filter drier simultaneously.
Be sure to use a filter drier for new refrigerant.

[2] Additional refrigerant charge

When charging directly from cylinder

· Check that cylinder for R410A on the market is syphon type.
· Charging should be performed with the cylinder of syphon stood vertically. (Refrigerant is charged from liquid phase.)

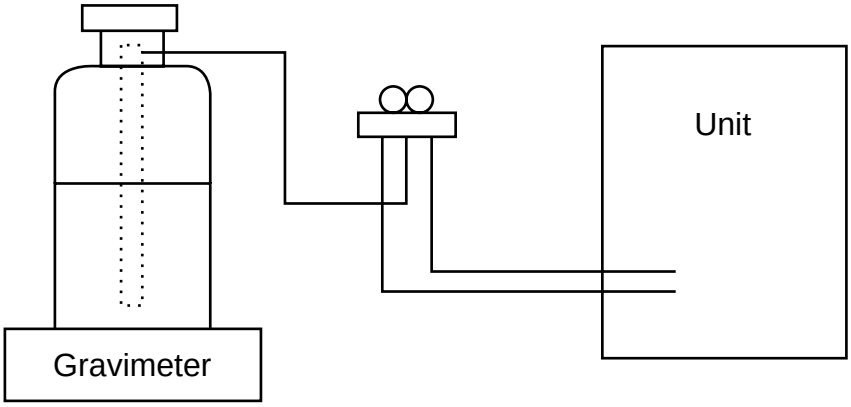

[3] Service tools

Use the below service tools as exclusive tools for R410A refrigerant.

No.	Tool name	Specifications
①	Gauge manifold	· Only for R410A
		· Use the existing fitting specifications. (UNF1/2)
		· Use high-tension side pressure of 5.3 MPa·G or over.
②	Charge hose	· Only for R410A
		· Use pressure performance of 5.09 MPa·G or over.
③	Electronic scale	—
④	Gas leak detector	· Use the detector for R134a, R407C or R410A.
⑤	Adaptor for reverse flow check	· Attach on vacuum pump.
⑥	Refrigerant charge base	—
⑦	Refrigerant cylinder	· Only for R410A · Top of cylinder (Pink) · Cylinder with syphon
⑧	Refrigerant recovery equipment	—

3 PART NAMES AND FUNCTIONS

3-1. Indoor unit

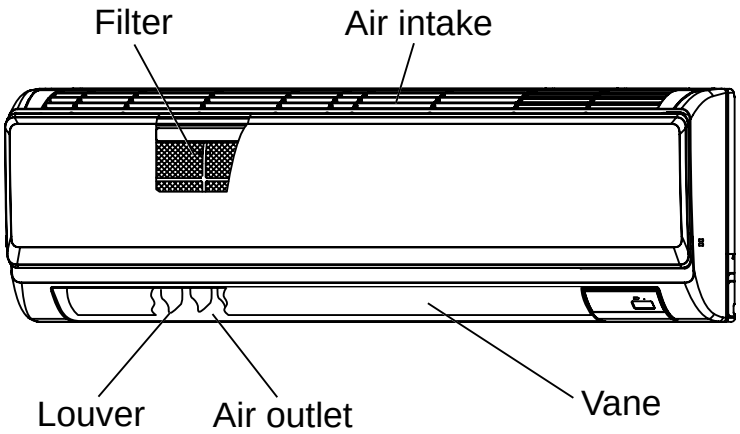

3-2. Wireless remote controller

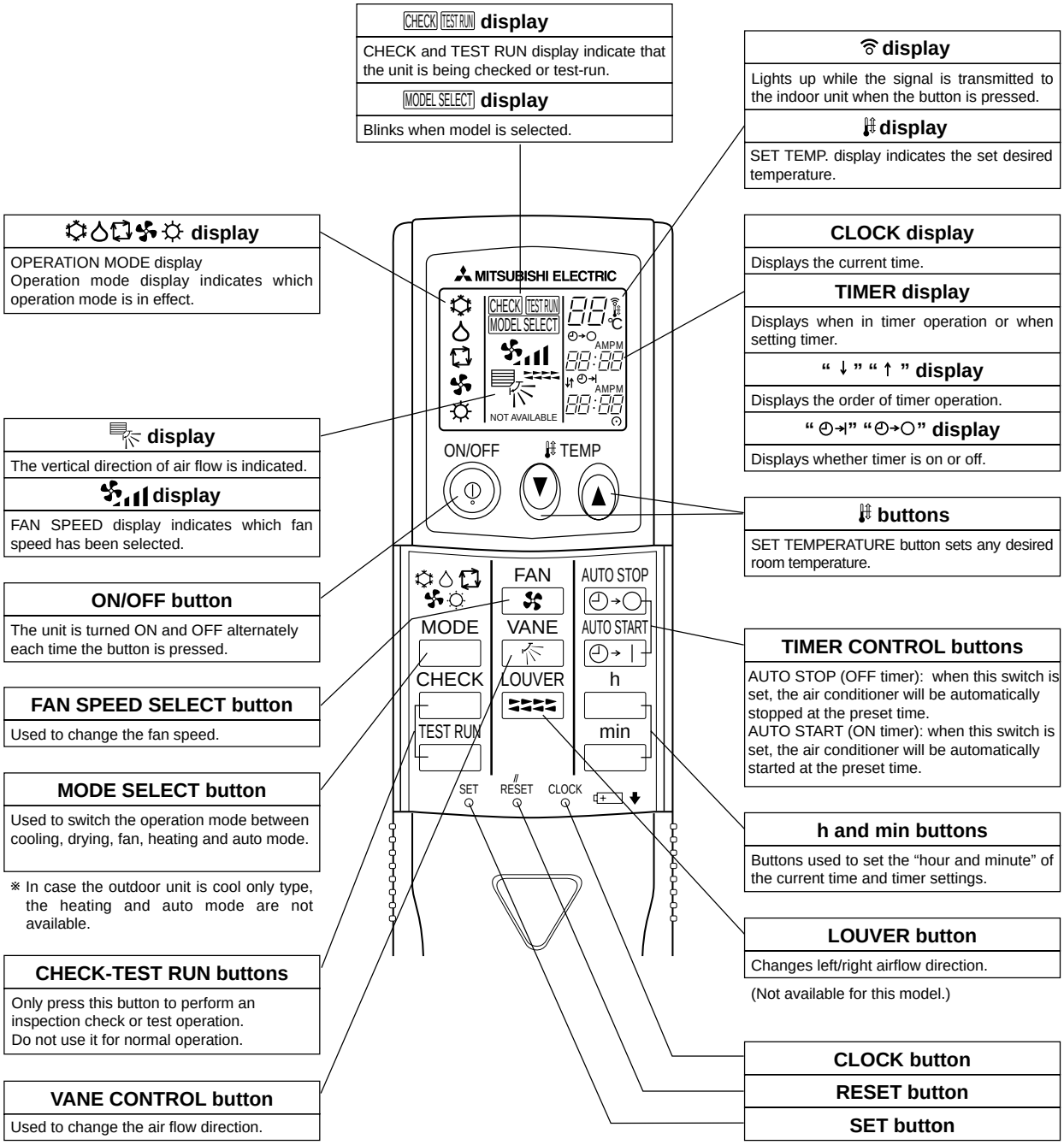

3-3. WIRED REMOTE CONTROLLER <PAR-30MAA/PAR-31MAA>

Wired remote controller function

* The functions which can be used are restricted according to the model.

○ : Supported ✕ : Unsupported

	Function	PAR-30MAA/PAR-31MAA		PAR-21MAA
		Slim	City multi	
Body	Product size H × W × D (mm)	120 × 120 × 19		120 × 130 × 19
	LCD	Full Dot LCD		Partial Dot LCD
	Backlight	○		✕
Energy-saving	Energy-saving operation schedule	○	✕	✕
	Automatic return to the preset temperature	○		✕
Restriction	Setting the temperature range restriction	○		○
Function	Operation lock function	○		○
	Weekly timer	○		✕
	On / Off timer	○		○
	High Power	○	✕	✕
	Manual vane angle	○		○

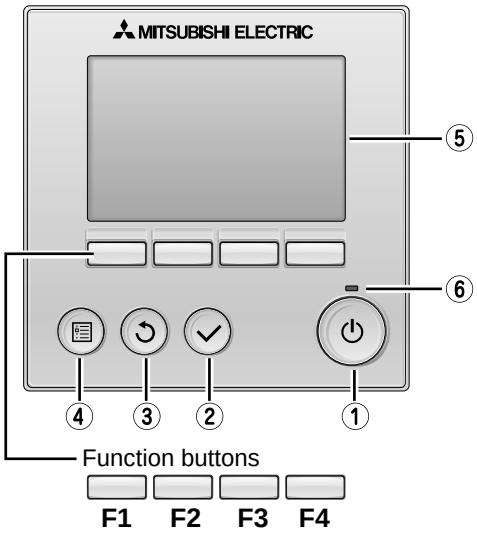

The functions of the function buttons change depending on the screen. Refer to the button function guide that appears at the bottom of the LCD for the functions they serve on a given screen.
When the system is centrally controlled, the button function guide that corresponds to the locked button will not appear.

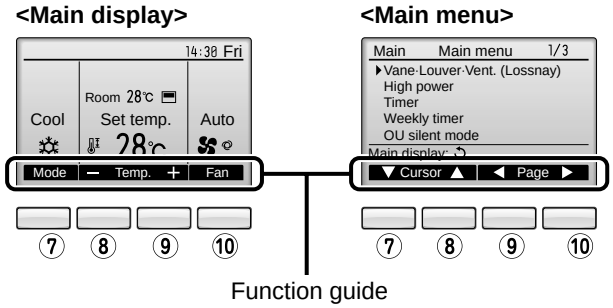

① ON / OFF button

Press to turn ON/OFF the indoor unit.

② SELECT button

Press to save the setting.

③ RETURN button

Press to return to the previous screen.

④ MENU button

Press to bring up the Main menu.

⑤ Backlit LCD

Operation settings will appear.
When the backlight is off, pressing any button turns the backlight on and it will stay lit for a certain period of time depending on the screen.

When the backlight is off, pressing any button turns the backlight on and does not perform its function. (except for the ⏻ (ON / OFF) button)

⑥ ON / OFF lamp

This lamp lights up in green while the unit is in operation. It blinks while the remote controller is starting up or when there is an error.

⑦ Function button F1

Main display : Press to change the operation mode.
Main menu : Press to move the cursor down.

⑧ Function button F2

Main display : Press to decrease temperature.
Main menu : Press to move the cursor up.

⑨ Function button F3

Main display : Press to increase temperature.
Main menu : Press to go to the previous page.

⑩ Function button F4

Main display : Press to change the fan speed.
Main menu : Press to go to the next page.

The main display can be displayed in two different modes: "Full" and "Basic".
The factory setting is "Full". To switch to the "Basic" mode, change the setting on the Main display setting.

<Full mode>

* All icons are displayed for explanation.

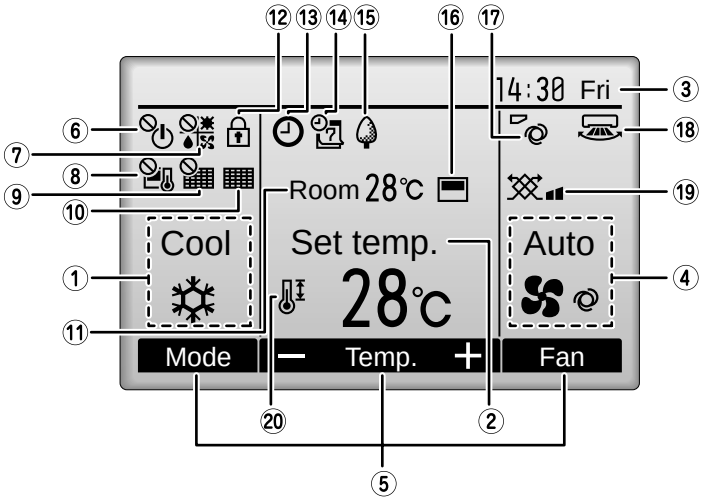

<Basic mode>

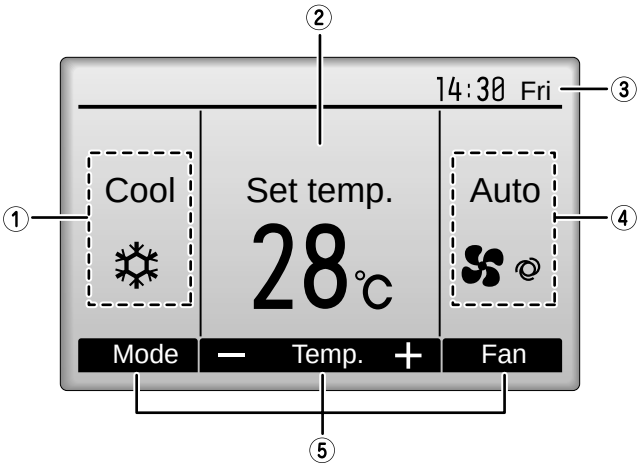

① Operation mode

Indoor unit operation mode appears here.

② Preset temperature

Preset temperature appears here.

③ Clock (See the Installation Manual.)

Current time appears here.

④ Fan speed

Fan speed setting appears here.

⑤ Button function guide

Functions of the corresponding buttons appear here.

⑥

Appears when the ON/OFF operation is centrally controlled.

⑦

Appears when the operation mode is centrally controlled.

⑧

Appears when the preset temperature is centrally controlled.

⑨

Appears when the filter reset function is centrally controlled.

⑩

Indicates when filter needs maintenance.

⑪ Room temperature (See the Installation Manual.)

Current room temperature appears here.

⑫

Appears when the buttons are locked.

⑬

Appears when the On/Off timer or Night setback function is enabled.

⑭

Appears when the Weekly timer is enabled.

⑮

Appears while the units are operated in the energy-save mode.

⑯

Appears when the built-in thermistor on the remote controller is activated to monitor the room temperature.
appears when the thermistor on the indoor unit is activated to monitor the room temperature.

⑰

Indicates the vane setting.

⑱

Indicates the louver setting.

⑲

Indicates the ventilation setting.

⑳

Appears when the preset temperature range is restricted.

Most settings (except ON / OFF, mode, fan speed, temperature) can be made from the Menu screen.

Menu structure

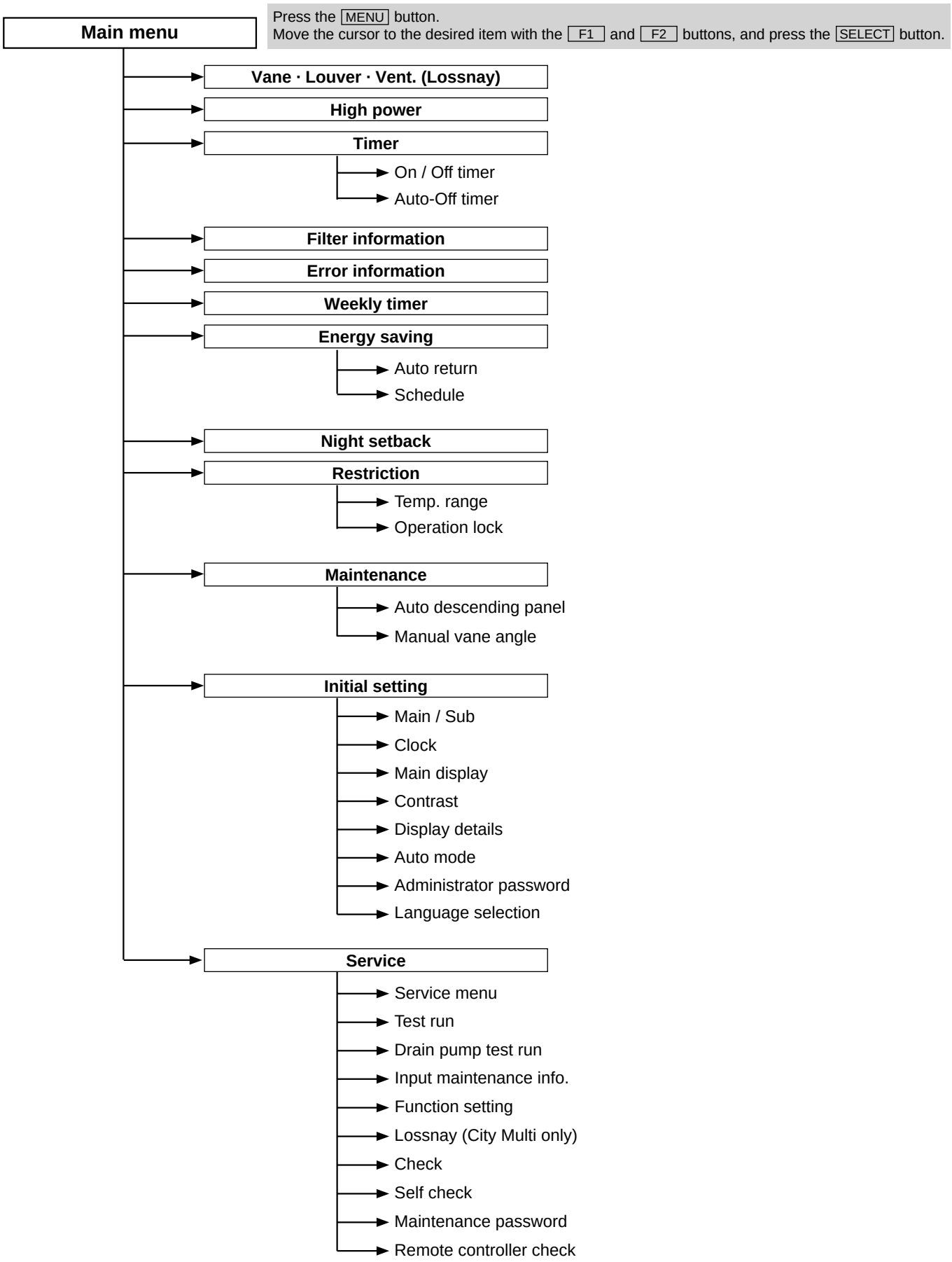

Not all functions are available on all models of indoor units.

Main menu list

Setting and display items		Setting details
Vane · Louver · Vent. (Lossnay)		**Use to set the vane angle.** • Select a desired vane setting from five different settings. **Use to turn ON / OFF the louver.** • Select a desired setting from "ON" and "OFF." **Use to set the amount of ventilation.** • Select a desired setting from "Off," "Low," and "High."
High power		**Use to reach the comfortable room temperature quickly.** • Units can be operated in the High-power mode for up to 30 minutes.
Timer	**On/Off timer**	**Use to set the operation On/Off times.** • Time can be set in 5-minute increments. * Clock setting is required.
	Auto-Off timer	**Use to set the Auto-Off time.** • Time can be set to a value from 30 to 240 in 10-minute increments.
Filter information		**Use to check the filter status.** • The filter sign can be reset.
Error information		**Use to check error information when an error occurs.** • Error code, error source, refrigerant address, unit model, manufacturing number, contact information (dealer's phone number) can be displayed. * The unit model, manufacturing number, and contact information need to be registered in advance to be displayed.
Weekly timer		**Use to set the weekly operation On / Off times.** • Up to eight operation patterns can be set for each day. * Clock setting is required. * Not valid when the On/Off timer is enabled.
Energy saving	**Auto return**	**Use to get the units to operate at the preset temperature after performing energy-save operation for a specified time period.** • Time can be set to a value from 30 and 120 in 10-minute increments. * This function will not be valid when the preset temperature ranges are restricted.
	Schedule	**Set the start/stop times to operate the units in the energy-save mode for each day of the week, and set the energy-saving rate.** • Up to four energy-save operation patterns can be set for each day. • Time can be set in 5-minute increments. • Energy-saving rate can be set to a value from 0% or 50 to 90% in 10% increments. * Clock setting is required.
Night setback		**Use to make Night setback settings.** • Select "Yes" to enable the setting, and "No" to disable the setting. The temperature range and the start/stop times can be set. * Clock setting is required.
Restriction	**Temp. range**	**Use to restrict the preset temperature range.** • Different temperature ranges can be set for different operation modes.
	Operation lock	**Use to lock selected functions.** • The locked functions cannot be operated.
Maintenance	**Auto descending panel**	**Auto descending panel (Optional parts) Up / Down you can do.**
	Manual vane angle	**Use to set the vane angle for each vane to a fixed position.**
Initial setting	**Main/Sub**	**When connecting two remote controllers, one of them needs to be designated as a sub controller.**
	Clock	**Use to set the current time.**
	Main display	**Use to switch between "Full" and "Basic" modes for the Main display.** • The default setting is "Full."
	Contrast	**Use to adjust screen contrast.**

Setting and display items		Setting details
Initial setting	**Display details**	**Make the settings for the remote controller related items as necessary.** **Clock:** The factory settings are "Yes" and "24h" format. **Temperature:** Set either Celsius (°C) or Fahrenheit (°F). **Room temp. :** Set Show or Hide. **Auto mode:** Set the Auto mode display or Only Auto display.
	Auto mode	**Whether or not to use the AUTO mode can be selected by using the button.** **This setting is valid only when indoor units with the AUTO mode function are connected.**
	Administrator password	**The administrator password is required to make the settings for the following items.** • Timer setting • Energy-save setting • Weekly timer setting • Restriction setting • Outdoor unit silent mode setting • Night set back
	Language selection	**Use to select the desired language.**
Service	**Test run**	**Select "Test run" from the Service menu to bring up the Test run menu.** • Test run • Drain pump test run
	Input maintenance	**Select "Input maintenance Info." from the Service menu to bring up the Maintenance information screen.** **The following settings can be made from the Maintenance Information screen.** • Model name input • Serial No. input • Dealer information input
	Function setting	**Make the settings for the indoor unit functions via the remote controller as necessary.**
	LOSSNAY setting (City Multi only)	**This setting is required only when the operation of City Multi units is interlocked with LOSSNAY units.**
	Check	**Error history:** Display the error history and execute delete error history. **Refrigerant leak check:** Refrigerant leaks can be judged. **Smooth maintenance:** The indoor and outdoor maintenance data can be displayed. **Request cord:** Details of the operation data including each thermistor temperature and error history can be checked.
	Self check	**Error history of each unit can be checked via the remote controller.**
	Maintenance password	**Take the following steps to change the maintenance password.**
	Remote controller check	**When the remote controller does not work properly, use the remote controller checking function to troublushoot the problem.**

3-4. WIRED REMOTE CONTROLLER <PAR-21MAA>

Display Section

For purposes of this explanation, all parts of the display are shown. During actual operation, only the relevant items will be lit.

Day-of-Week
Shows the current day of the week.

Time/Timer Display
Shows the current time, unless the simple or Auto Off timer is set.
If the simple or Auto Off timer is set, the time to be switched off is shown.

"Sensor" indication
Displayed when the remote controller sensor is used.

"Locked" indicator
Indicates that remote controller buttons have been locked.

"Clean The Filter" indicator
To be displayed on when it is time to clean the filter.

Timer indicators
The indicator comes on if the corresponding timer is set.

Fan Speed indicator
Shows the selected fan speed.

Ventilation indicator
Appears when the unit is running in Ventilation mode.

Identifies the current operation
Shows the operating mode, etc.
*Multilanguage display is available.

"Centrally Controlled" indicator
Indicates that operation from the remote controller has been prohibited by a master controller.

"Timer is Off" indicator
Indicates that the timer is off.

Temperature Setting
Shows the target temperature.

Up/Down Air Direction indicator
The indicator ↘ shows the direction of the outcoming airflow.

"One Hour Only" indicator
Displayed if the airflow is set to Low or downward during COOL or DRY mode. (Operation varies according to model.)
The indicator goes off in one hour, at which time the airflow direction also changes.

Room Temperature display
Shows the room temperature. The room temperature display range is 8 - 39℃. The display blinks if the temperature is less than 8℃ or 39℃ or more.

Louver display
Indicates the action of the swing louver. Does not appear if the louver is not running.

◉ (Power On indicator)
Indicates that the power is on.

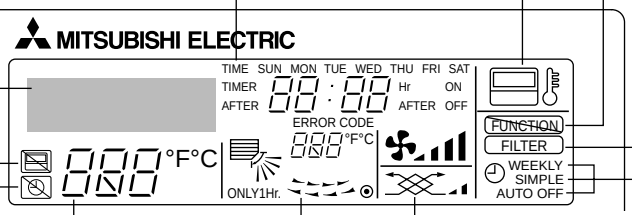

Operation Section

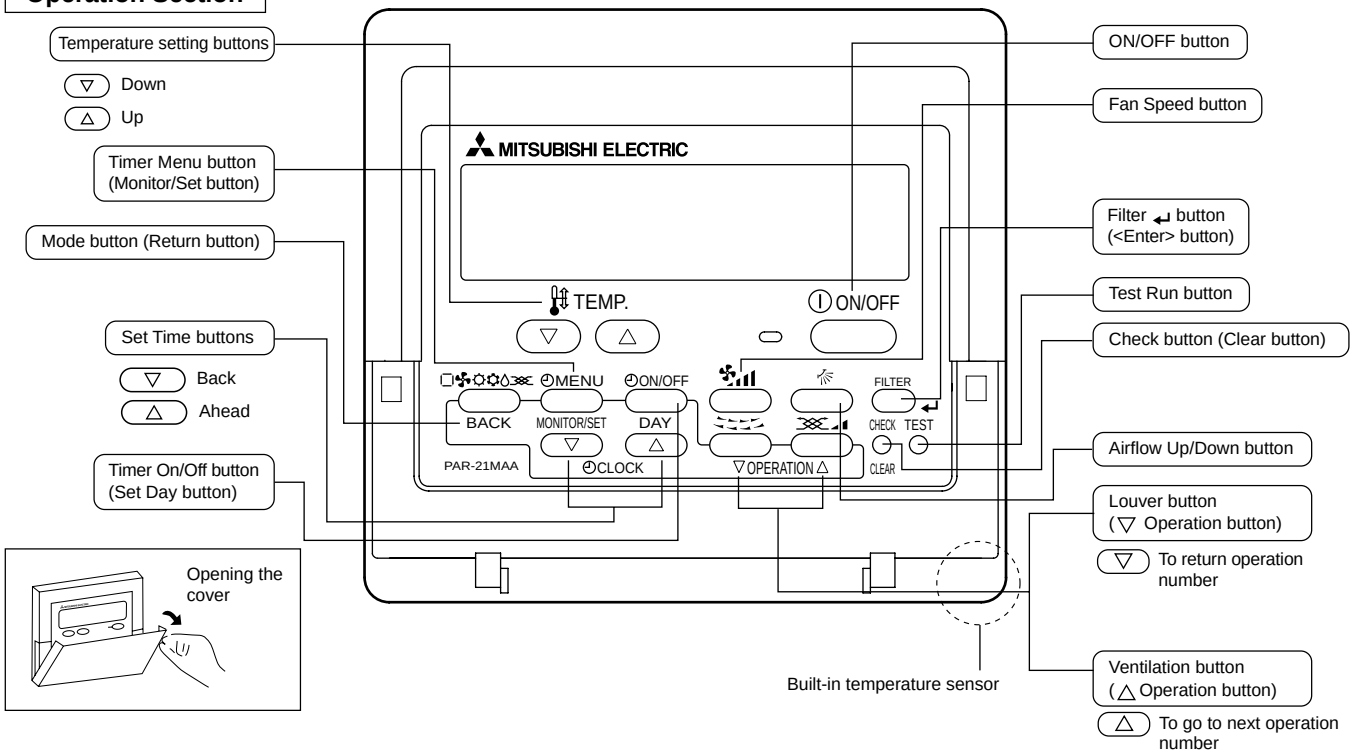

Note:
- "PLEASE WAIT" message
  This message is displayed for approximately 3 minutes when power is supplied to the indoor unit or when the unit is recovering from a power failure.
- "NOT AVAILABLE" message
  This message is displayed if an invalid button is pressed (to operate a function that the indoor unit does not have).
  If a single remote controller is used to operate multiple indoor units simultaneously that are different types, this message will not be displayed as far as any of the indoor units is equipped with the function.

4 SPECIFICATION

4-1. Specifications

Service Ref.			PKFY-P32VHM-E	PKFY-P40VHM-E	PKFY-P50VHM-E
Power source			1-phase 220-240V 50Hz, 1-phase 220V 60Hz		
Cooling capacity (Nominal)	*1	kW	3.6	4.5	5.6
	*1	kcal/h	3,100	3,900	4,800
	*1	Btu/h	12,300	15,400	19,100
	*2	kcal/h	3,150	4,000	5,000
	Power input	kW	0.03	0.03	0.03
	Current input	A	0.30	0.30	0.30
Heating capacity (Nominal)	*3	kW	4.0	5.0	6.3
	*3	kcal/h	3,400	4,300	5,400
	*3	Btu/h	13,600	17,100	21,500
	Power input	kW	0.03	0.03	0.03
	Current input	A	0.30	0.30	0.30
External finish			Plastic, MUNSELL (1.0Y 9.2/0.2)		
External dimension H × W × D		mm	295 × 898 × 249		
		in.	11-5/8" × 35-3/8" × 9-13/16"		
Net weight		kg (lb)	13 (29)		
Heat exchanger			Cross fin (Aluminum fin and copper tube)		
Fan	Type × Quantity		Line flow fan × 1		
	External static press.	Pa	0		
		mmH_2O	0		
	Motor type		DC motor		
	Motor output	kW	0.030		
	Driving mechanism		Direct-drive		
	Airflow rate (Low-Mid2-Mid1-High)	m^3/min	8 - 9.5 - 10.5 - 11.5		9 - 10 - 11 - 12
		L/s	133 - 158 - 175 - 192		150 - 167 - 183 - 200
		cfm	283 - 335 - 371 - 406		318 - 353 - 388 - 424
Noise level (Low-Mid2-Mid1-High) (measured in anechoic room)		dB <A>	33 - 36 - 38 - 41		34 - 37 - 40 - 43
Insulation material			Polyethylene sheet		
Air filter			PP honeycomb		
Protection device			Fuse		
Refrigerant control device			LEV		
Connectable outdoor unit			R410A CITY MULTI		
Diameter of refrigerant pipe	Liquid (R410A)	mm (in.)	ø6.35 (ø1/4") Flare	ø6.35 (ø1/4") Flare	ø6.35 (ø1/4") Flare
	Gas (R410A)	mm (in.)	ø12.7 (ø1/2") Flare	ø12.7 (ø1/2") Flare	ø12.7 (ø1/2") Flare
Field drain pipe size		mm (in.)	I.D. 16mm (5/8")		
Standard attachment	Document		Installation Manual, Instruction Book		
	Accessory		—	—	Flare nut 3/8F, 5/8F
Remarks	Optional parts		—		
	Installation		Details on foundation work, insulation work, electrical wiring, power source switch, and other items shall be referred to the Installation Manual.		

Note :

	*1 Nominal cooling conditions	*2 Nominal cooling conditions	*3 Nominal heating conditions
Indoor :	27°CDB/19°CWB (81°FDB/66°FWB)	27°CDB/19.5°CWB (81°FDB/67°FWB)	20°CDB (68°FDB)
Outdoor :	35°CDB (95°FDB)	35°CDB (95°FDB)	7°CDB/6°CWB (45°FDB/43°FWB)
Pipe length :	7.5 m (24-9/16 ft)	5 m (16-3/8 ft)	7.5 m (24-9/16 ft)
Level difference :	0 m (0 ft)	0 m (0 ft)	0 m (0 ft)

* Nominal conditions *1, *3 are subject to JIS B8615-1.
* Due to continuing improvement, above specification may be subject to change without notice.

Unit converter

kcal/h = kW × 860
Btu/h = kW × 3,412
cfm = m^3/min × 35.31
lb = kg/0.4536

*Above specification data is subject to rounding variation.

Service Ref.			PKFY-P32VHM-ER1 PKFY-P32VHM-ER2	PKFY-P40VHM-ER1 PKFY-P40VHM-ER2	PKFY-P50VHM-ER1 PKFY-P50VHM-ER2
Power source			1-phase 220-240V 50Hz, 1-phase 220V 60Hz		
Cooling capacity (Nominal)	*1	kW	3.6	4.5	5.6
	*1	kcal/h	3,100	3,900	4,800
	*1	Btu/h	12,300	15,400	19,100
	*2	kcal/h	3,150	4,000	5,000
	Power input *4	kW	0.04	0.04	0.04
	Current input *4	A	0.40	0.40	0.40
Heating capacity (Nominal)	*3	kW	4.0	5.0	6.3
	*3	kcal/h	3,400	4,300	5,400
	*3	Btu/h	13,600	17,100	21,500
	Power input	kW	0.03	0.03	0.03
	Current input	A	0.30	0.30	0.30
External finish			Plastic, MUNSELL (1.0Y 9.2/0.2)		
External dimension H × W × D		mm	295 × 898 × 249		
		in.	11-5/8" × 35-3/8" × 9-13/16"		
Net weight		kg (lb)	13 (29)		
Heat exchanger			Cross fin (Aluminum fin and copper tube)		
Fan	Type × Quantity		Line flow fan × 1		
	External static press.	Pa	0		
		mmH_2O	0		
	Motor type		DC motor		
	Motor output	kW	0.030		
	Driving mechanism		Direct-drive		
	Airflow rate (Low-Mid-High)	m^3/min	9 - 10 - 11	9 - 10.5 - 11.5	9 - 10.5 - 12
		L/s	150 - 167 - 183	150 - 175 - 192	150 - 175 - 200
		cfm	318 - 353 - 388	318 - 371 - 406	318 - 371 - 424
Noise level (Low-Mid-High) (measured in anechoic room)		dB <A>	34 - 37 - 41	34 - 38 - 41	34 - 39 - 43
Insulation material			Polyethylene sheet		
Air filter			PP honeycomb		
Protection device			Fuse		
Refrigerant control device			LEV		
Connectable outdoor unit			R410A CITY MULTI		
Diameter of refrigerant pipe	Liquid (R410A)	mm (in.)	ø6.35 (ø1/4") Flare	ø6.35 (ø1/4") Flare	ø6.35 (ø1/4") Flare
	Gas (R410A)	mm (in.)	ø12.7 (ø1/2") Flare	ø12.7 (ø1/2") Flare	ø12.7 (ø1/2") Flare
		mm (in.)	I.D. 16mm (5/8")		
Field drain pipe size	Document		Installation Manual, Instruction Book		
Standard	Accessory		—		
attachment	Optional parts		Drain pump kit PAC-SH75DM-E		
Remarks					
	Installation		Details on foundation work, insulation work, electrical wiring, power source switch, and other items shall be referred to the Installation Manual.		

Note :

	*1 Nominal cooling conditions	*2 Nominal cooling conditions	*3 Nominal heating conditions
Indoor :	27°CDB/19°CWB (81°FDB/66°FWB)	27°CDB/19.5°CWB (81°FDB/67°FWB)	20°CDB (68°FDB)
Outdoor :	35°CDB (95°FDB)	35°CDB (95°FDB)	7°CDB/6°CWB (45°FDB/43°FWB)
Pipe length :	7.5 m (24-9/16 ft)	5 m (16-3/8 ft)	7.5 m (24-9/16 ft)
Level difference :	0 m (0 ft)	0 m (0 ft)	0 m (0 ft)

*4 Electrical characteristics of cooling are included optional drain-pump.
* Nominal conditions *1, *3 are subject to JIS B8615-1.
* Due to continuing improvement, above specification may be subject to change without notice.

*5 Connect the joint (purchased locally) for R407C/R22.

Unit converter

kcal/h = kW × 860
Btu/h = kW × 3,412
cfm = m^3/min × 35.31
lb = kg/0.4536

*Above specification data is subject to rounding variation.

4-2. Electrical parts specifications

Parts name \ Service Ref.	Symbol	PKFY-P32VHM-E PKFY-P32VHM-ER1 PKFY-P32VHM-ER2	PKFY-P40VHM-E PKFY-P40VHM-ER1 PKFY-P40VHM-ER2	PKFY-P50VHM-E PKFY-P50VHM-ER1 PKFY-P50VHM-ER2
Room temperature thermistor	TH21	Resistance 0℃/15kΩ, 10℃/9.6kΩ, 20℃/6.3kΩ, 25℃/5.4kΩ, 30℃/4.3kΩ, 40℃/3.0kΩ		
Liquid pipe thermistor	TH22	Resistance 0℃/15kΩ, 10℃/9.6kΩ, 20℃/6.3kΩ, 25℃/5.4kΩ, 30℃/4.3kΩ, 40℃/3.0kΩ		
Gas pipe thermistor	TH23 TH24	Resistance 0℃/15kΩ, 10℃/9.6kΩ, 20℃/6.3kΩ, 25℃/5.4kΩ, 30℃/4.3kΩ, 40℃/3.0kΩ		
Fuse (Indoor controller board)	FUSE	250V 3.15A		
Fan motor	MF	8-Pole Output 30W / RCOJ30-CK		
Vane motor (with limit switch)	MV	MSFBC20 DC12V		
Linear expansion valve	LEV	DC12V Stepping motor drive Port ϕ3.2 (0~2000pulse)		
Power supply terminal block	TB2	(L, N, ⏚) 250V 20A		
Transmission terminal block	TB5	(M1, M2, S) 250V 20A		
MA remote controller terminal block	TB15	(1, 2) 250V 10A		

4-3. Sound levels

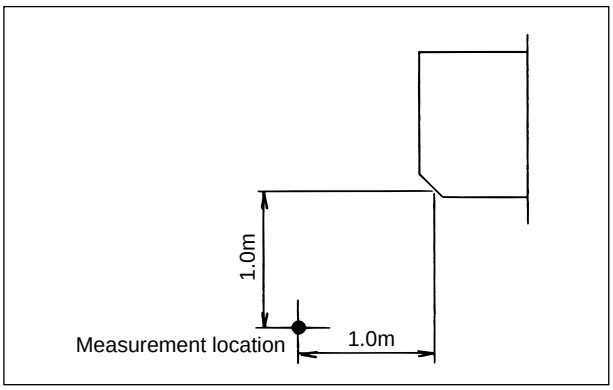

* Measured in anechoic room.

Sound level at anechoic room : Low-(Middle2-Middle1)-High

Service Ref.	Sound level dB (A)
PKFY-P32VHM-E PKFY-P40VHM-E	33-36-38-41
PKFY-P50VHM-E	34-37-40-43

Sound level at anechoic room : Low-Middle-High

Service Ref.	Sound level dB (A)
PKFY-P32VHM-ER1 PKFY-P32VHM-ER2	34-37-41
PKFY-P40VHM-ER1 PKFY-P40VHM-ER2	34-38-41
PKFY-P50VHM-ER1 PKFY-P50VHM-ER2	34-39-43

4-4. NC curves

PKFY-P32, 40VHM-E

External static pressure : 0Pa
Power source : 220,230,240V, 50Hz / 220V, 60Hz

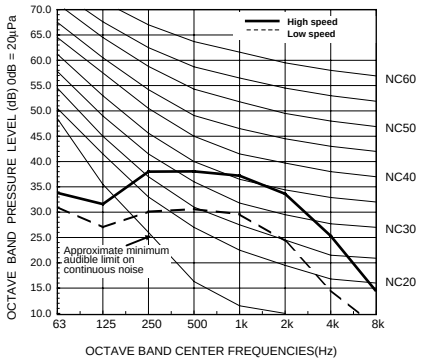

PKFY-P32, 40VHM-ER1
PKFY-P32, 40VHM-ER2

External static pressure : 0Pa
Power source : 220,230,240V, 50Hz / 220V, 60Hz

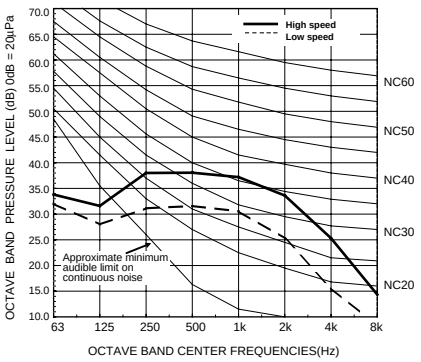

PKFY-P50VHM-E PKFY-P50VHM-ER1
PKFY-P50VHM-ER2

External static pressure : 0Pa
Power source : 220,230,240V, 50Hz / 220V, 60Hz

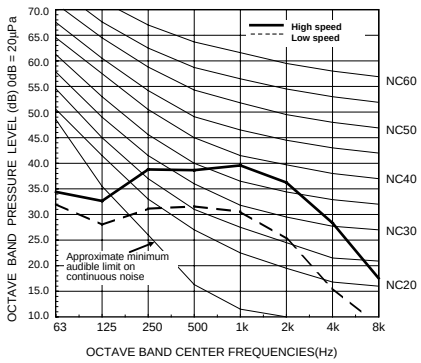

5 OUTLINES AND DIMENSIONS

PKFY-P32VHM-E
PKFY-P40VHM-E
PKFY-P50VHM-E
PKFY-P32VHM-ER1
PKFY-P40VHM-ER1
PKFY-P50VHM-ER1
PKFY-P32VHM-ER2
PKFY-P40VHM-ER2
PKFY-P50VHM-ER2

Unit : mm

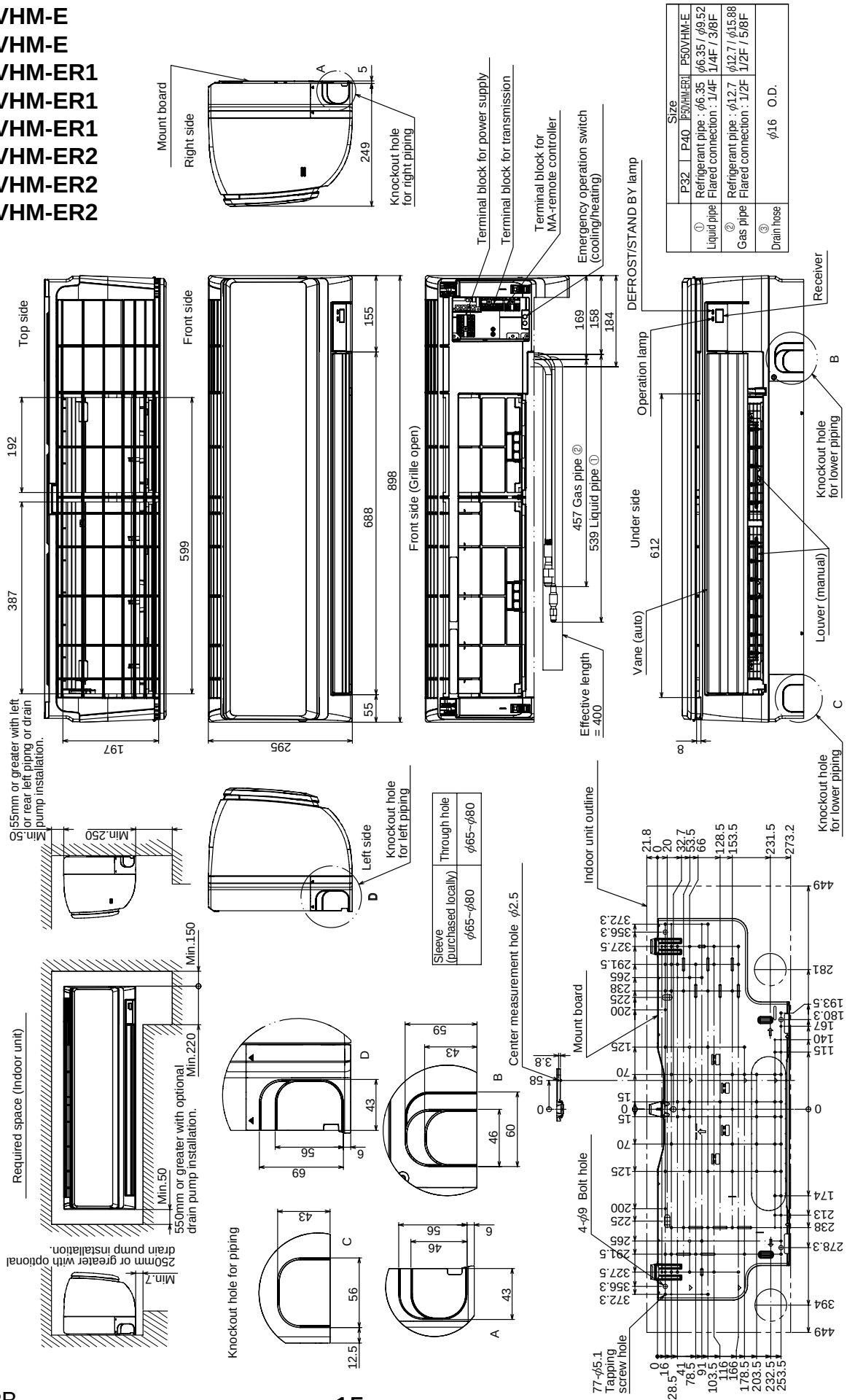

6 WIRING DIAGRAM

PKFY-P32VHM-E **PKFY-P40VHM-E** **PKFY-P50VHM-E**
PKFY-P32VHM-ER1 **PKFY-P40VHM-ER1** **PKFY-P50VHM-ER1**

SYMBOL		NAME	
I.B		INDOOR CONTROLLER BOARD	
	CN32	CONNECTOR	REMOTE SWITCH
	CN51		CENTRALLY CONTROL
	CN52		REMOTE INDICATION
	BZ	BUZZER	
	DSA	SURGE ABSORBER	
	FUSE	FUSE (T3.15AL 250V)	
	LED1	POWER SUPPLY (I.B)	
	LED2	POWER SUPPLY (I.B)	
	SW2	SWITCH	CAPACITY CODE
	SW3		MODE SELECTION
	SW4		MODEL SELECTOR
	SWE		DRAIN PUMP (TEST MODE)
	X1	AUX.RELAY	DRAIN PUMP (OPTION)
	MOV 01.02	VARISTOR	
LEV		LINEAR EXPANSION VALVE	
MF		FAN MOTOR	
MV		VANE MOTOR	
TB2		TERMINAL BLOCK	POWER SUPPLY
TB5			TRANSMISSION
TB15			MA-REMOTE CONTROLLER

SYMBOL		NAME	
TH21		THERMISTOR	ROOM TEMP. DETECTION (0°C/15kΩ, 25°C/5.4kΩ)
TH22			PIPE TEMP. DETECTION / LIQUID (0°C/15kΩ, 25°C/5.4kΩ)
TH23			PIPE TEMP. DETECTION / GAS1 (0°C/15kΩ, 25°C/5.4kΩ)
TH24			PIPE TEMP. DETECTION / GAS2 (0°C/15kΩ, 25°C/5.4kΩ)
A.B		ADDRESS BOARD	
	SWA	SWITCH	FAN SPEED SELECTOR
	SW1		MODE SELECTION
	SW11		ADDRESS SETTING 1s DIGIT
	SW12		ADDRESS SETTING 10ths DIGIT
	SW14		BRANCH No.
S.B		SWITCH BOARD	
	SWE1	EMERGENCY OPERATION(HEAT)	
	SWE2	EMERGENCY OPERATION(COOL)	
W.B		PCB FOR WIRELESS REMOTE CONTROLLER	
	LED1	LED(OPERATION INDICATOR: GREEN)	
	LED2	LED(OPERARTION FOR HEATING : ORANGE)	
	RU	RECEIVING UNIT	
DP		DRAIN PUMP (OPTION)	
	FS	DRAIN FLOAT SWITCH (OPTION)	

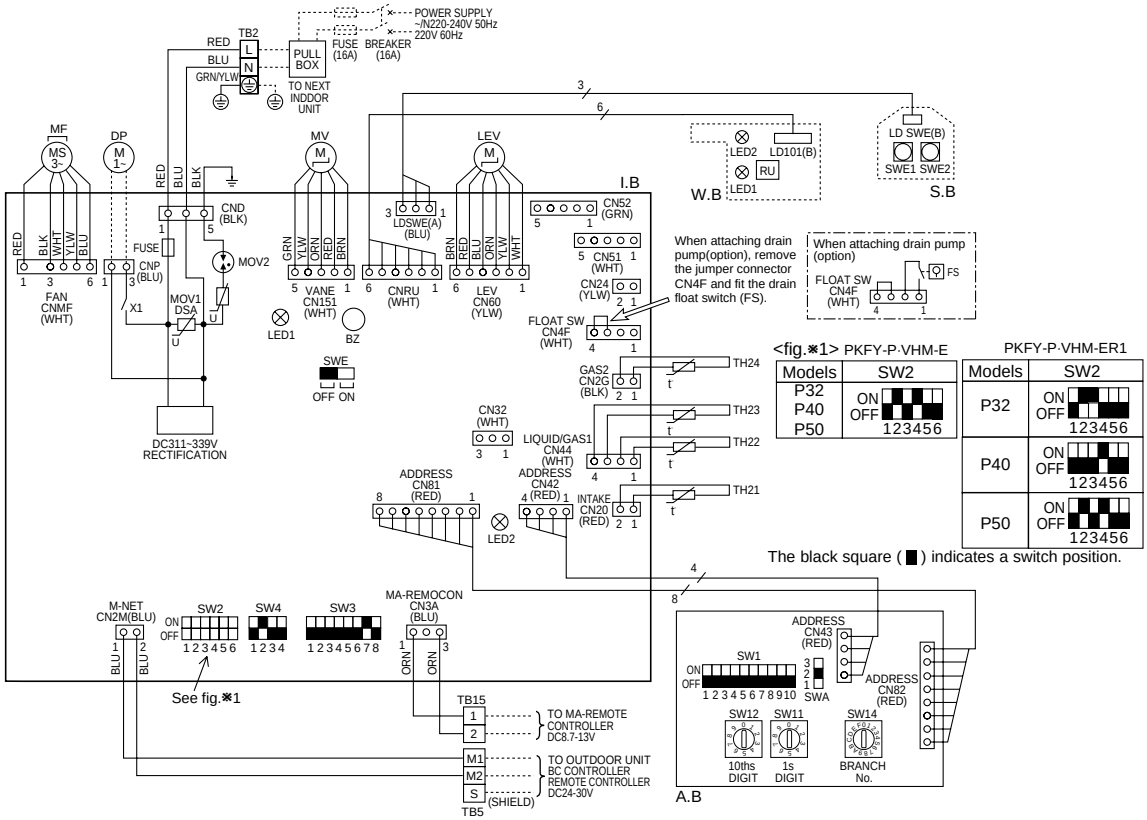

<fig.※1> PKFY-P·VHM-E

Models	SW2
P32 P40 P50	ON OFF 123456

PKFY-P·VHM-ER1

Models	SW2
P32	ON OFF 123456
P40	ON OFF 123456
P50	ON OFF 123456

The black square (■) indicates a switch position.

LED on indoor board for service

Mark	Meaning	Function
LED1	Main power supply	Main power supply (Indoor unit: 220-240V) Power on → lamp is lit
LED2	Power supply for MA-Remote controller	Power supply for MA-Remote controller on → lamp is lit

NOTES:
1. At servicing for outdoor unit,always follow the wiring diagram of outdoor unit.
2. In case of using MA-Remote controller, please connect to TB15.
   (Remote controller wire is non-polar.)
3. In case of using M-NET, please connect to TB5. (Transmission line is non-polar.)
4. Symbol [S] of TB5 is the shield wire connection.
5. Symbols used in wiring diagram above are, ▭▭▭: terminal block, ○○○:connecter.
6. The setting of the SW2 dip switches differs in the capacity. For the detail, refer to the fig. ※1.

PKFY-P32VHM-ER2 PKFY-P40VHM-ER2 PKFY-P50VHM-ER2

SYMBOL		NAME	
I.B		INDOOR CONTROLLER BOARD	
	CN32	CONNECTOR	REMOTE SWITCH
	CN51		CENTRALLY CONTROL
	CN52		REMOTE INDICATION
	CN100		IT TERMINAL
	BZ1	BUZZER	
	FUSE	FUSE (T3.15AL 250V)	
	LED1	POWER SUPPLY (I.B)	
	LED2	POWER SUPPLY (I.B)	
	SW2	SWITCH	CAPACITY CODE
	SW3		MODE SELECTION
	SW4		MODEL SELECTOR
	SWE		DRAIN PUMP (TEST MODE)
	X1	AUX.RELAY	DRAIN PUMP (OPTION)
LEV		LINEAR EXPANSION VALVE	
MF		FAN MOTOR	
MV		VANE MOTOR	
TB2		TERMINAL BLOCK	POWER SUPPLY
TB5			TRANSMISSION
TB15			MA-REMOTE CONTROLLER

SYMBOL		NAME	
TH21		THERMISTOR	ROOM TEMP. DETECTION (0°C/15kΩ, 25°C/5.4kΩ)
TH22			PIPE TEMP. DETECTION / LIQUID (0°C/15kΩ, 25°C/5.4kΩ)
TH23			PIPE TEMP. DETECTION / GAS1 (0°C/15kΩ, 25°C/5.4kΩ)
TH24			PIPE TEMP. DETECTION / GAS2 (0°C/15kΩ, 25°C/5.4kΩ)
A.B		ADDRESS BOARD	
	SWA	SWITCH	FAN SPEED SELECTOR
	SW1		MODE SELECTION
	SW11		ADDRESS SETTING 1s DIGIT
	SW12		ADDRESS SETTING 10ths DIGIT
	SW14		BRANCH No.
S.B		SWITCH BOARD	
	SWE1	EMERGENCY OPERATION (HEAT)	
	SWE2	EMERGENCY OPERATION (COOL)	
W.B		PCB FOR WIRELESS REMOTE CONTROLLER	
	LED1	LED (OPERATION INDICATOR: GREEN)	
	LED2	LED (PREPARATION FOR HEATING: ORANGE)	
	RU	RECEIVING UNIT	
DP		DRAIN PUMP (OPTION)	
	FS	DRAIN FLOAT SWITCH (OPTION)	

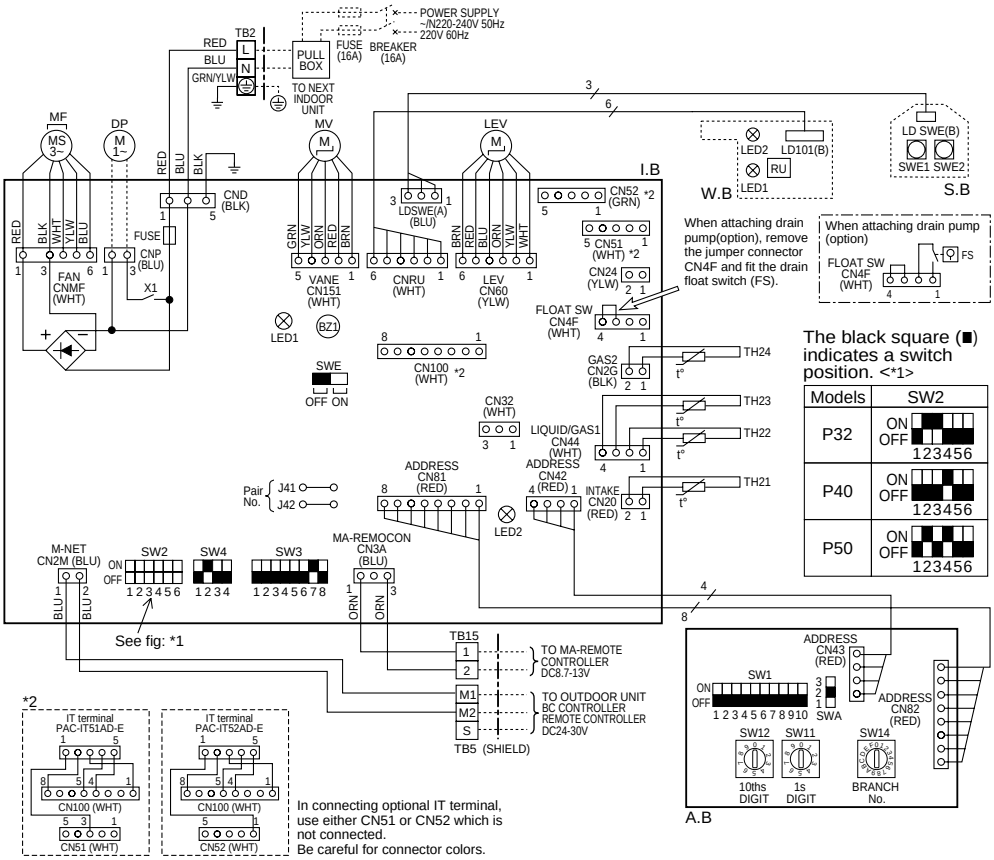

NOTES:

1. At servicing for outdoor unit,always follow the wiring diagram of outdoor unit.
2. In case of using MA-Remote controller, please connect to TB15. (Remote controller wire is non-polar.)
3. In case of using M-NET, please connect to TB5. (Transmission line is non-polar.)
4. Symbol [S] of TB5 is the shield wire connection.
5. Symbols used in wiring diagram above are, ☐☐☐ : terminal block, ○ ○ ○ :connecter.
6. The setting of the SW2 dip switches differs in the capacity. For the detail, refer to the fig: *1.

LED on indoor board for service

Mark	Meaning	Function
LED1	Main power supply	Main power supply (Indoor unit:220-240V) Power on → lamp is lit
LED2	Power supply for MA-Remote controller	Power supply for MA-Remote controller on → lamp is lit

7 REFRIGERANT SYSTEM DIAGRAM

PKFY-P32VHM-E **PKFY-P40VHM-E** **PKFY-P50VHM-E**
PKFY-P32VHM-ER1 **PKFY-P40VHM-ER1** **PKFY-P50VHM-ER1**
PKFY-P32VHM-ER2 **PKFY-P40VHM-ER2** **PKFY-P50VHM-ER2**

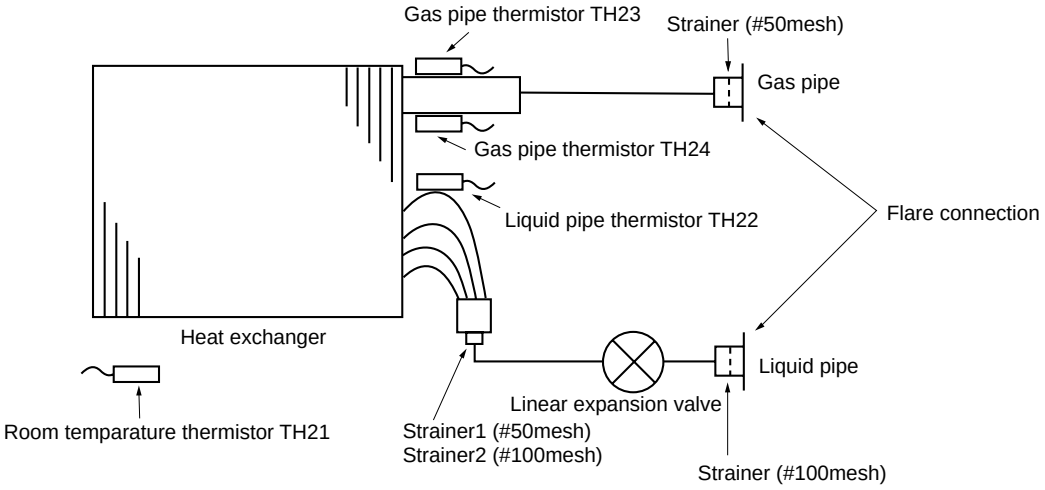

Unit : mm (inch)

Item \ Service Ref.	PKFY-P32VHM-E(R1/R2) PKFY-P40VHM-E(R1/R2)	PKFY-P50VHM-ER1 PKFY-P50VHM-ER2	PKFY-P50VHM-E
Gas pipe	ϕ12.7(1/2)	ϕ12.7(1/2)	ϕ12.7(1/2)/ϕ15.88(5/8)
Liquid pipe	ϕ6.35(1/4)	ϕ6.35(1/4)	ϕ6.35(1/4)/ϕ9.52(3/8)

8 TROUBLESHOOTING

8-1. HOW TO CHECK THE PARTS

PKFY-P32VHM-E **PKFY-P40VHM-E** **PKFY-P50VHM-E**
PKFY-P32VHM-ER1 **PKFY-P40VHM-ER1** **PKFY-P50VHM-ER1**
PKFY-P32VHM-ER2 **PKFY-P40VHM-ER2** **PKFY-P50VHM-ER2**

<table>
<tr><th>Parts name</th><th>Check points</th></tr>
<tr><td>Room temperature thermistor (TH21)
Liquid pipe temperature thermistor (TH22)
Gas pipe temperature thermistor (TH23 ,24)</td><td>Disconnect the connector then measure the resistance with a tester.
(At the ambient temperature 10℃ - 30℃)
<table><tr><th>Normal</th><th>Abnormal</th></tr><tr><td>4.3kΩ~9.6kΩ</td><td>Open or short</td></tr></table>Refer to the next page for the details.</td></tr>
<tr><td>Vane motor (MV)
 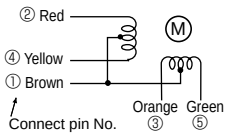
</td><td>Measure the resistance between the terminals with a tester. (Coil temperature 25℃)
<table><tr><th colspan="4">Normal</th><th>Abnormal</th></tr><tr><td>①-②
Brown-Red</td><td>①-③
Brown-Orange</td><td>①-④
Brown-Yellow</td><td>①-⑤
Brown-Green</td><td rowspan="2">Open or short</td></tr><tr><td colspan="4">350Ω ± 7%</td></tr></table></td></tr>
<tr><td>Fan motor (MF)</td><td>Refer to 8-1-3.</td></tr>
<tr><td>Linear expansion valve (LEV)
 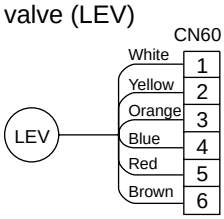
</td><td>Disconnect the connector then measure the resistance value with a tester.
(Coil temperature 20℃)
<table><tr><th colspan="4">Normal</th><th>Abnormal</th></tr><tr><td>(1)-(5)
White-Red</td><td>(2)-(6)
Yellow-Brown</td><td>(3)-(5)
Orange-Red</td><td>(4)-(6)
Blue-Brown</td><td rowspan="2">Open or short</td></tr><tr><td colspan="4">200Ω ± 10%</td></tr></table></td></tr>
</table>

8-1-1. Thermistor

<Thermistor Characteristic graph>

Thermistor for lower temperature	Room temperature thermistor (TH21) Liquid pipe temperature thermistor (TH22) Gas pipe temperature thermistor (TH23) (TH24)

Thermistor R_0=15kΩ ± 3%
Fixed number of B=3480 ± 2%

$$Rt=15\exp\{3480(\frac{1}{273+t}-\frac{1}{273})\}$$

0℃	15kΩ
10℃	9.6kΩ
20℃	6.3kΩ
25℃	5.4kΩ
30℃	4.3kΩ
40℃	3.0kΩ

< Thermistor for lower temperature >

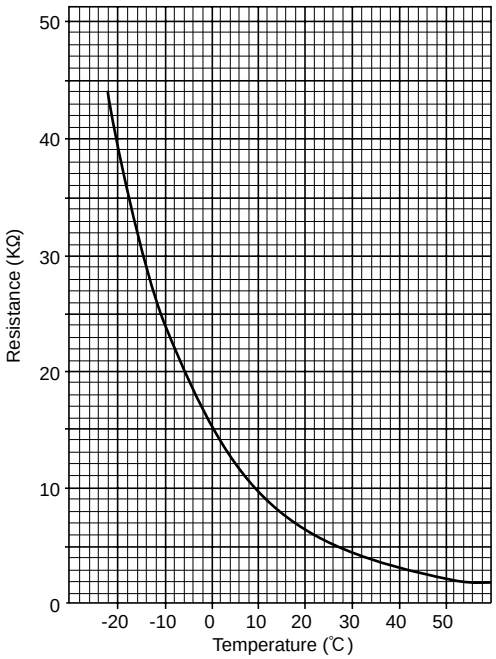

8-1-2. Liner expansion valve

① **Operation summary of the linear expansion valve**
• Linear expansion valve opens/closes through stepping motor after receiving the pulse signal from the indoor controller board.
• Valve position can be changed in proportion to the number of pulse signal.
<Connection between the indoor controller board and the linear expansion valve>

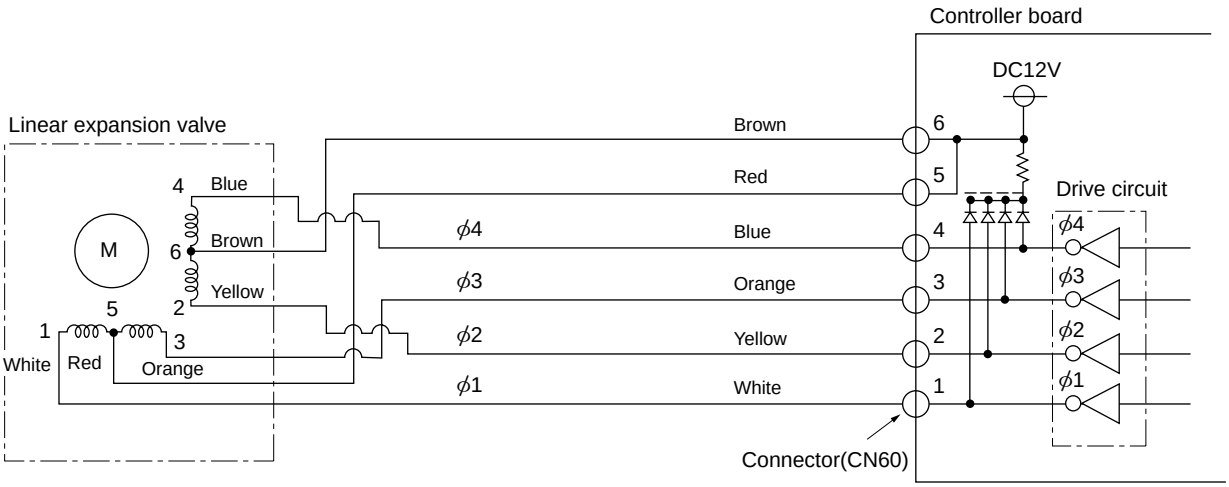

<Output pulse signal and the valve operation>

Output (Phase)	Output			
	1	2	3	4
ϕ1	ON	OFF	OFF	ON
ϕ2	ON	ON	OFF	OFF
ϕ3	OFF	ON	ON	OFF
ϕ4	OFF	OFF	ON	ON

Closing a valve : 1 → 2 → 3 → 4 → 1
Opening a valve : 4 → 3 → 2 → 1 → 4
The output pulse shifts in above order.

- When linear expansion valve operation stops, all output phase become OFF.
- At phase interruption or when phase does not shift in order, motor does not rotate smoothly and motor will lock and vibrate.

- When the switch is turned on, 2200 pulse closing valve signal will be sent till it goes to point Ⓐ in order to define the valve position.

- When the valve moves smoothly, there is no noise or vibration occurring from the linear expansion valves; however, when the pulse number moves from Ⓔ to Ⓐ or when the valve is locked, more noise can be heard than in a normal situation.
- Noise can be detected by placing the ear against the screw driver handle while putting the screw driver tip to the linear expansion valve.

② Linear expansion valve operation

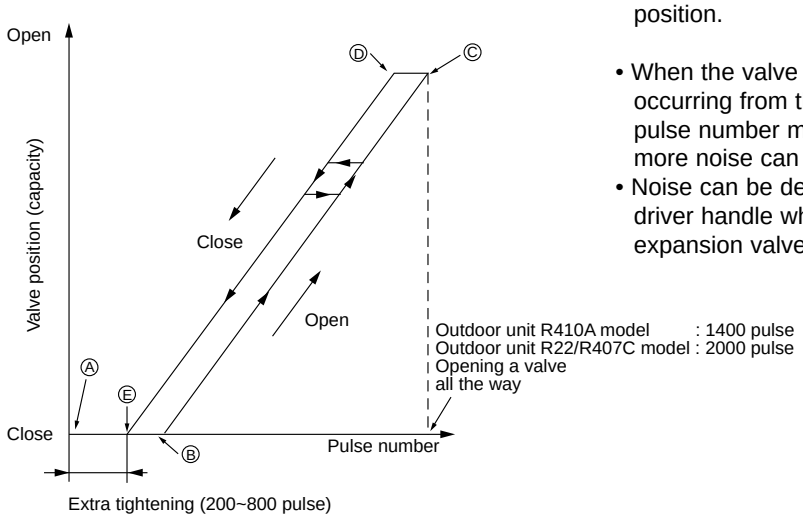

③ Troubleshooting

Symptom	Check points	Countermeasures
Operation circuit failure of the micro processor	Disconnect the connector on the controller board, then connect LED for checking. 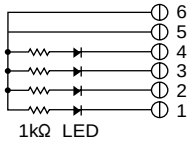 When power is turned on, pulse signals will be output for 10 seconds. There must be some defects in the operation circuit if the LED does not light while the signals are output or keeps lighting even after the signals stop.	Exchange the indoor controller board in case of drive circuit failure.
Linear expansion valve mechanism is locked.	Motor will idle and make a ticking noise when the motor is operated while the linear expansion valve is locked. This ticking sound is the sign of the abnormality.	Exchange the linear expansion valve.
Short or breakage of the motor coil of the linear expansion valve	Measure the resistance between each coil (white-red, yellow-brown, orange-red, blue-brown) using a tester. It is normal if the resistance is in the range of 200Ω ±10%.	Exchange the linear expansion valve.
Valve does not close completely.	To check the linear expansion valve, operate the indoor unit in fan mode and at the same time operate other indoor units in cooling mode, then check the pipe temperature <liquid pipe temperature> of the indoor unit by the outdoor multi controller board operation monitor. During fan operation, linear expansion valve is closed completely and if there is any leaking, detecting temperature of the thermistor will go lower. If the detected temperature is much lower than the temperature indicated in the remote controller, it means the valve is not closed all the way. 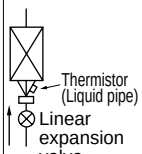 It is not necessary to exchange the linear expansion valve, if the leakage is small and not affecting normal operation.	If large amount of refrigerant is leaked, exchange the linear expansion valve.
Wrong connection of the connector or contact failure	Check the color of lead wire and missing terminal of the connector.	Disconnect the connector at the controller board, then check the continuity.

8-1-3. DC Fan motor (fan motor/indoor controller circuit board)

Check method of DC fan motor (fan motor/indoor controller circuit board)

① Notes

· High voltage is applied to the connecter (CNMF) for the fan motor. Pay attention to the service.

· Do not pull out the connector (CNMF) for the motor with the power supply on.
(It causes trouble of the indoor controller circuit board and fan motor.)

② Self check

Symptom : The indoor fan cannot turn around.

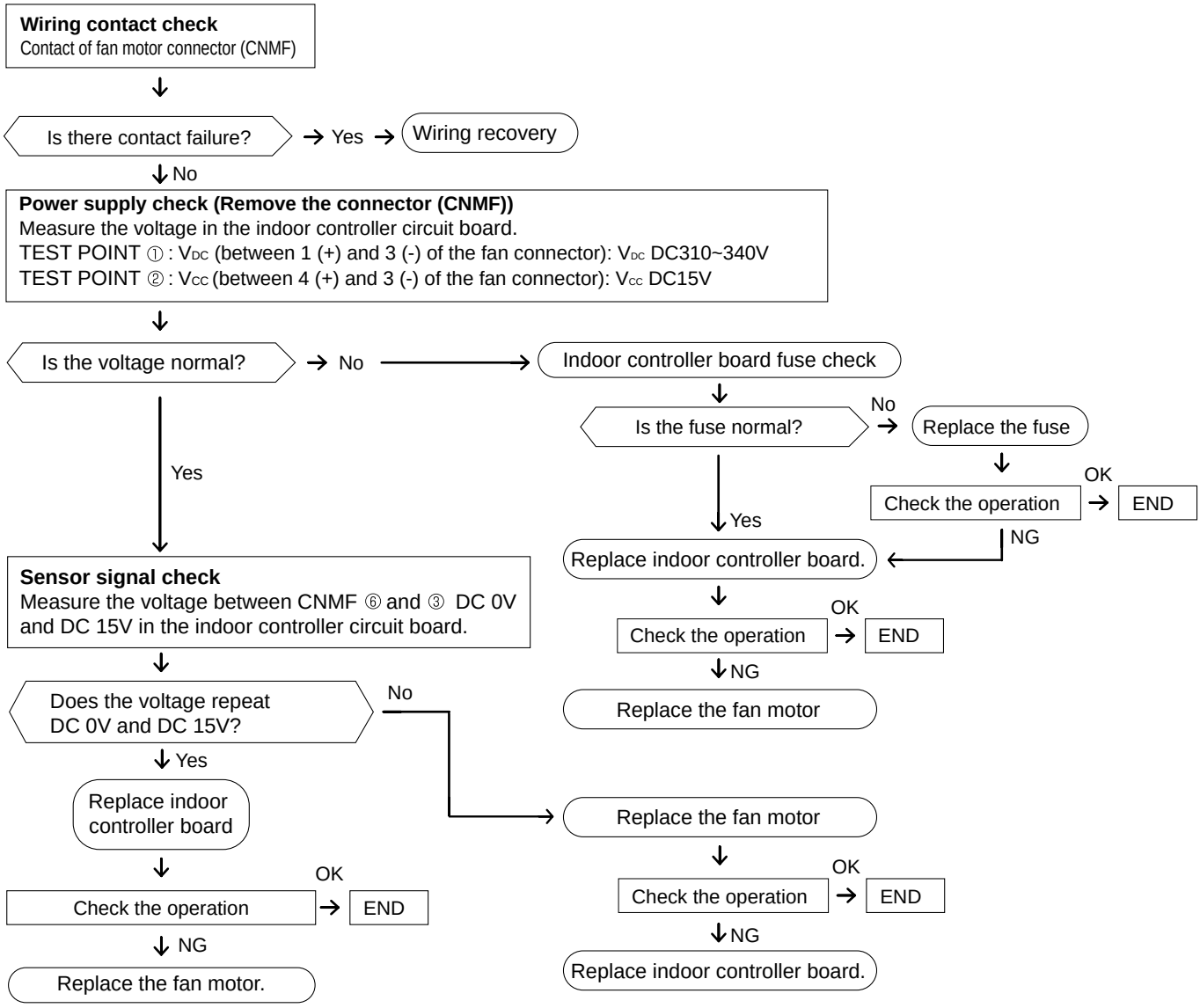

8-2. FUNCTION OF DIP SWITCH

PKFY-P32VHM-E **PKFY-P40VHM-E** **PKFY-P50VHM-E**
PKFY-P32VHM-ER1 **PKFY-P40VHM-ER1** **PKFY-P50VHM-ER1**
PKFY-P32VHM-ER2 **PKFY-P40VHM-ER2** **PKFY-P50VHM-ER2**

The black square (■) indicates a switch position.

Switch	Pole	Function	Operation by switch		Effective timing	Remarks
			ON	OFF		
SW1 Mode selection	1	Thermistor<Room temperature> position	Built-in remote controller	Indoor unit	Under suspension	Address board <Initial setting> ON / OFF 1 2 3 4 5 6 7 8 9 10 NOTE: *1 SW1-7 / SW1-8 / Fan speed OFF / OFF / Extra low ON / OFF / Low OFF / ON / Setting air flow ON / ON / Stop *2 It is impossible to intake the fresh air.
	2	Filter clogging detection	Provide	Not provide		
	3	Filter cleaning sign	2,500 hr	100 hr		
	4	Fresh air intake *2	Not effective	Not effective		
	5	Switching remote controller display	Thermo ON signal indication	Fan output indication		
	6	Humidifier control	Fan operation at Heating mode	Thermo ON operation at heating mode		
	7	Air flow set in case of heat thermo OFF	Low *1	Extra low *1		
	8		Setting air flow *1	Depends on SW1-7		
	9	Auto restart function	Effective	Not effective		
	10	Power ON/OFF by breaker	Effective	Not effective		
SW2 Capacity code switch	1~6	PKFY-P·VHM-E Models: P32, P40, P50 SW2: ON / OFF, 123456 PKFY-P·VHM-ER1 PKFY-P·VHM-ER2 Models / SW2 P32: ON / OFF, 123456 P40: ON / OFF, 123456 P50: ON / OFF, 123456			Before power supply ON	Indoor controller board
SW3 Function selection	1	Heat pump/Cool only	Cooling only	Heat pump	Under suspension	Indoor controller board <Initial setting> ON / OFF 1 2 3 4 5 6 7 8 *1 Second setting is same as first setting. *2 Please do not change SW3-7 and 3-8 as trouble might be caused by the usage condition.
	2	Not used	—	—		
	3	Not used	—	—		
	4	Vane horizontal angle	Second setting *1	First setting		
	5	Changing the opening of linear expansion valve during thermo OFF	Effective	Not effective		
	6	Heating 4 degree up	Not effective	Effective		
	7	Target superheat setting *2	—	—		
	8	Target subcool *2	—	—		
SW4 Model selection	1~4	In case of replacing the indoor controller board, make sure to set the switch to the initial setting, which is shown below. ON / OFF 1 2 3 4			Before power supply ON	Indoor controller board

Switch		Operation by switch	Effective timing	Remarks
SW11 1s digit address setting SW12 10ths digit address setting	Rotary Switch	SW12 SW11 10 1 How to set addresses Example : If address is "3", remain SW12 (for over 10) at "0", and match SW11 (for 1 to 9) with "3".	Before power supply ON	Address board <Initial setting> SW12 SW11
SW14 Branch No. Setting	Rotary switch	SW14 How to set branch numbers SW14 (Series R2 only) Match the indoor unit's refrigerant pipe with the BC controller's end connection number. Remain other than series R2 at "0".		Address board <Initial setting> SW14
J41, J42 Wireless remote controller Pair No.	Jumper	• To operate each indoor unit by each remote controller when installed 2 indoor units or more are near, Pair No. setting is necessary. ● Pair No. setting is available with the 4 patterns (Setting patterns A to D). ● Make setting for J41, J42 of indoor controller board and the Pair No. of wireless remote controller. • You may not set it when operating it by one remote controller. ● Setting for indoor unit Cut jumper wire J41, J42 on the indoor controller board according to the table below. ● Wireless remote controller pair number: Setting operation 1. Press the SET button (using a pointed implement). Check that the remote controller's display has stopped before continuing. MODEL SELECT flashes, and the model No. (3 digits) appears (steadily-lit). 2. Press the MINUTE button twice. The pair number appears flashing. 3. Press the temperature buttons to select the pair number to set. 4. Press the SET button (using a pointed implement). The set pair number is displayed (steadily-lit) for 3 seconds, then disappears.	Under operation or suspension	<Initial setting> Pattern A Pair No. Model No. Temperature button Minute button SET button

Setting pattern	Indoor controller jumper wire		Pair No. of wireless remote controller *	
	J41	J42		
A	—	—	0	Initial setting
B	Cut	—	1	—
C	—	Cut	2	—
D	Cut	Cut	3	—

* Pair No.4-9 of wireless remote controller is setting pattern D.

8-3. TEST POINT DIAGRAM

8-3-1. Indoor controller board

PKFY-P32VHM-E **PKFY-P40VHM-E** **PKFY-P50VHM-E**
PKFY-P32VHM-ER1 **PKFY-P40VHM-ER1** **PKFY-P50VHM-ER1**
PKFY-P32VHM-ER2 **PKFY-P40VHM-ER2** **PKFY-P50VHM-ER2**

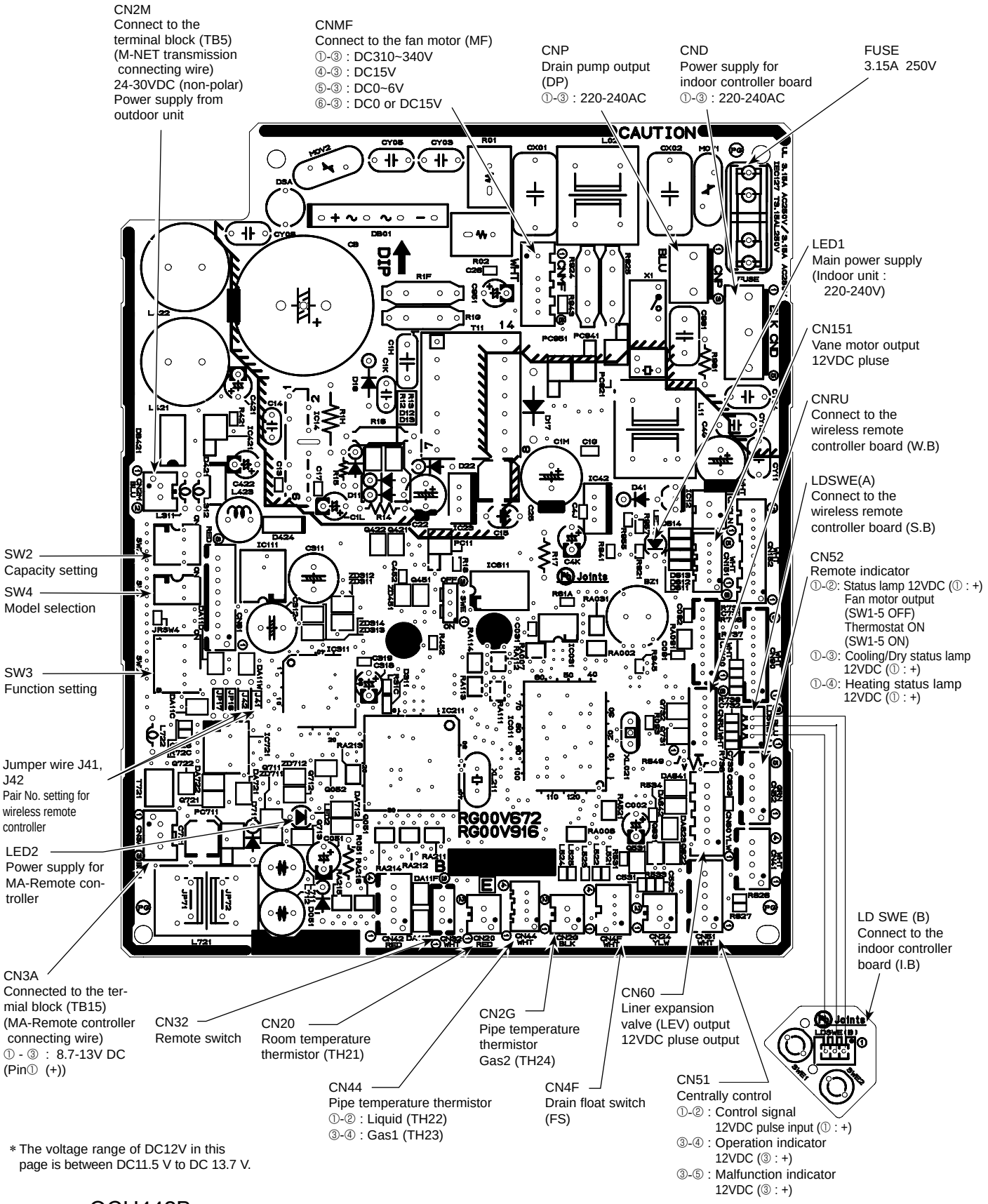

* The voltage range of DC12V in this page is between DC11.5 V to DC 13.7 V.

8-3-2. Wireless remote controller board

PKFY-P32VHM-E	**PKFY-P40VHM-E**	**PKFY-P50VHM-E**
PKFY-P32VHM-ER1	**PKFY-P40VHM-ER1**	**PKFY-P50VHM-ER1**
PKFY-P32VHM-ER2	**PKFY-P40VHM-ER2**	**PKFY-P50VHM-ER2**

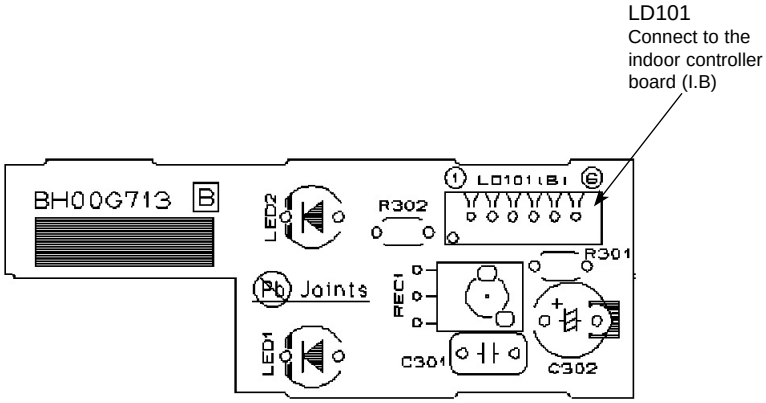

8-3-3. Address board

PKFY-P32VHM-E	**PKFY-P40VHM-E**	**PKFY-P50VHM-E**
PKFY-P32VHM-ER1	**PKFY-P40VHM-ER1**	**PKFY-P50VHM-ER1**
PKFY-P32VHM-ER2	**PKFY-P40VHM-ER2**	**PKFY-P50VHM-ER2**

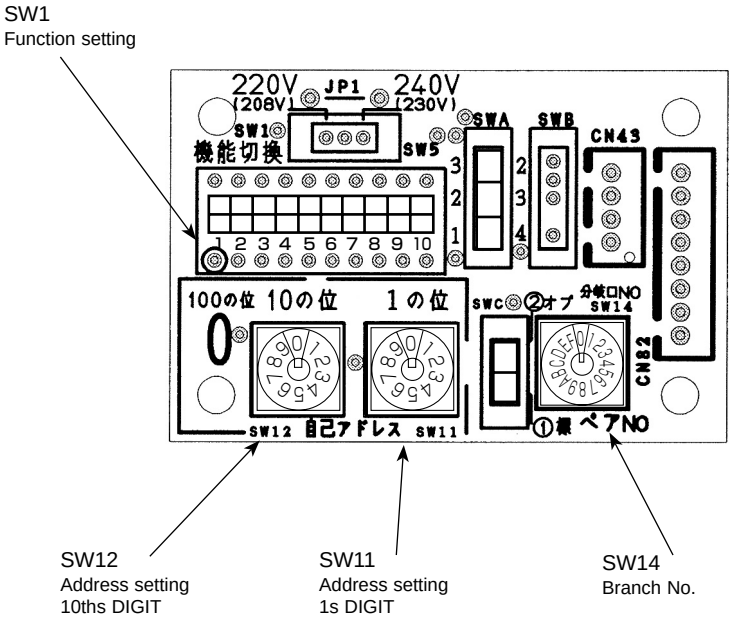

9 DISASSEMBLY PROCEDURE

PKFY-P32VHM-E **PKFY-P40VHM-E** **PKFY-P50VHM-E**
PKFY-P32VHM-ER1 **PKFY-P40VHM-ER1** **PKFY-P50VHM-ER1**
PKFY-P32VHM-ER2 **PKFY-P40VHM-ER2** **PKFY-P50VHM-ER2**

Be careful when removing heavy parts.

OPERATION PROCEDURE	PHOTOS & ILLUSTRATIONS
1. REMOVING THE LOWER SIDE OF THE INDOOR UNIT FROM THE INSTALLATION PLATE (1) Remove the front panel. (2) Insert the screw driver to the corner hole at both left and right side as shown in the figure 1. (3) Push it up, then pull down the lower side of indoor unit and remove the hook.	**Figure 1** 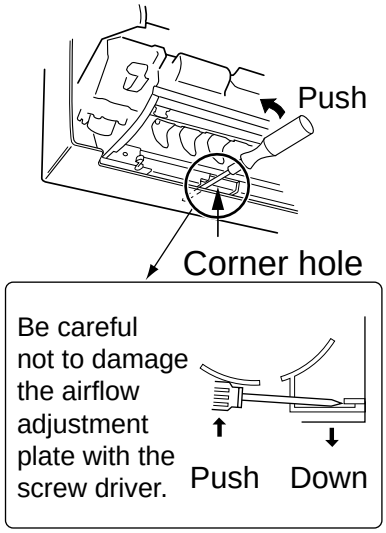
2. REMOVING THE FRONT PANEL (1) Press and unlock the knobs on both sides of the front panel and lift the front panel until it is level. Pull the hinges forward to remove the front panel. (See Photo 2) (2) Move the horizontal vanes in a downward direction. (3) Remove the screw caps of the panel. Remove the screws. (See Photo 1) (4) Hold the lower part of both ends of the panel and pull it slightly toward you, and then remove the panel by pushing it upward.	**Photo 1** 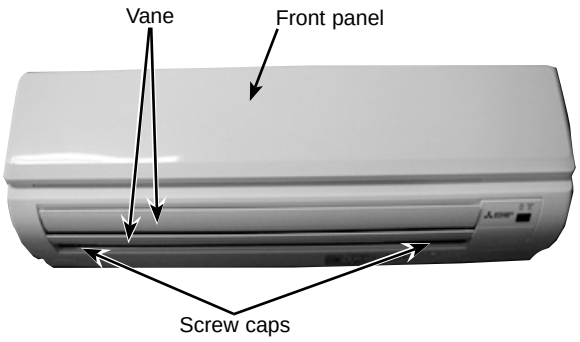 **Photo 2** 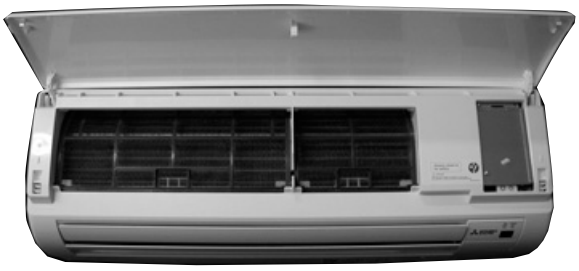

OPERATION PROCEDURE	PHOTOS
3. REMOVING THE INDOOR CONTROLLER BOARD AND WIRELESS CONTROLLER BOARD (1) Remove the front panel. (Refer to procedure 2) (2) Remove the room temp. thermistor TH21. (See Photo 3) (3) Remove the electrical box covers (screw 4 × 12). (See Photo 3) (4) Disconnect the connectors on the indoor controller board. (5) Remove the switch board cover. (6) Pull out the indoor controller board toward you, then disconnect the rest of connectors. Remove the indoor controller board and switch board. (7) Remove the holder of wireless controller board. (8) Disconnect the connector of wireless controller board and remove the wireless controller board from the holder.	**Photo 3** 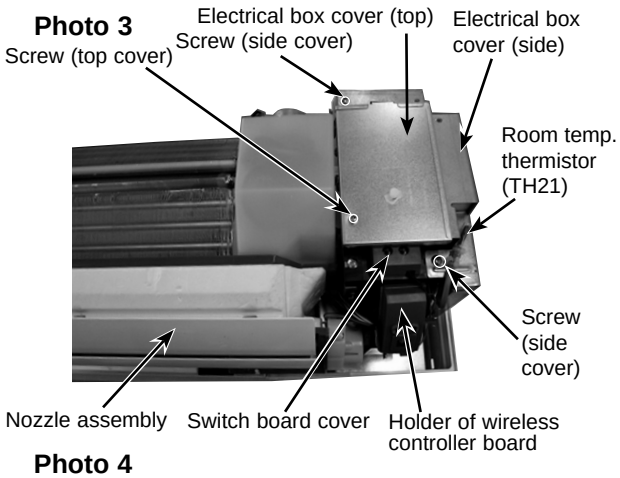 **Photo 4** 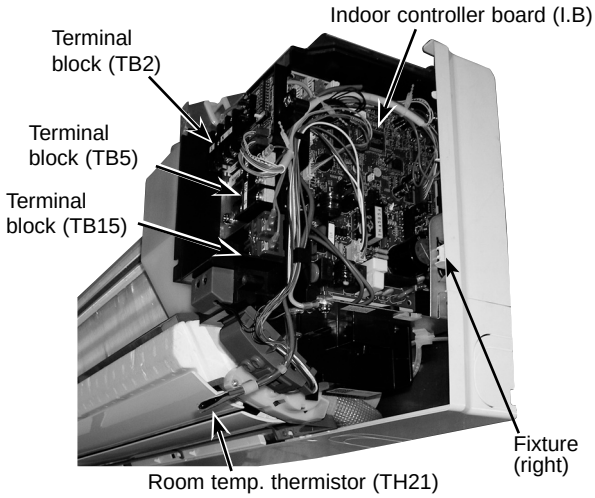
4. REMOVING THE ELECTRICAL BOX (1) Remove the front panel. (Refer to procedure 2) (2) Remove the electrical box covers. (See Photo 3) (3) Remove the nozzle assembly. (Refer to procedure 5) (4) Disconnect the transmission wiring of TB5. (5) Disconnect the power supply wiring of TB2. (6) Disconnect the wiring of MA-remote controller (TB15). (7) Disconnect the connectors on the indoor controller board. (8) Disconnect the connector for the ground wire. (See Photo 5) (9) Pull the disconnected lead wire out from the electrical box. (10) Remove the screw of electrical box. (See Photo 6) (11) Push up the upper fixture (See Photo 5) catch to remove the box, then pull the right fixture (See Photo 4) and remove it from the box fixture.	**Photo 5** 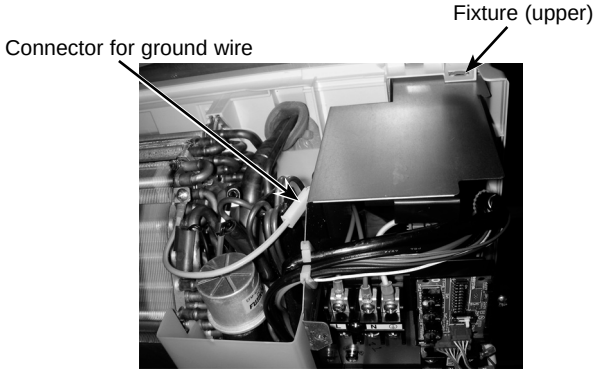 **Photo 6** 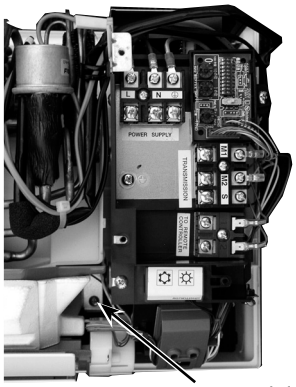

OPERATION PROCEDURE	PHOTOS
5. REMOVING THE NOZZLE ASSEMBLY (with VANE and VANE MOTOR) AND DRAIN HOSE (1) Remove the front panel (Refer to procedure 2). (2) Remove the electrical box cover. (See Photo 3) (3) Disconnect the vane motor connector (CN151) on the indoor controller board. (4) Remove the corner box. (5) Pull the nozzle assembly and detach. (6) Push the fixture and remove the drain hose.	**Photo 7** 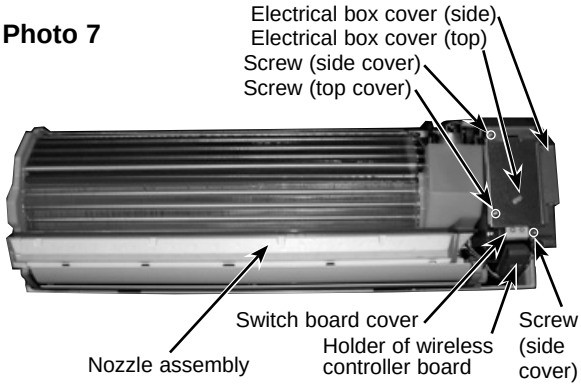
6. REMOVING THE INDOOR FAN MOTOR AND THE LINE FLOW FAN (1) Remove the front panel (Refer to procedure 2) and the corner box at right lower side. (2) Remove the electrical box (Refer to procedure 4) and the nozzle assembly (Refer to procedure 5). (3) Remove the screws fixing the motor bed. (See Photo 8) (4) Loosen the screw fixing the line flow fan. (See Photo 9) (5) Remove the motor bed together with fan motor and motor band. (6) Release the hooks of the motor band. Remove the motor band. Pull out the indoor fan motor. (7) Remove the screws fixing the left side of the heat exchanger. (See Photo 10) (8) Lift the heat exchanger, and pull out the line flow fan to the lower-left. **Photo 10** 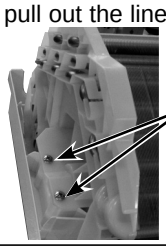 	**Photo 8** 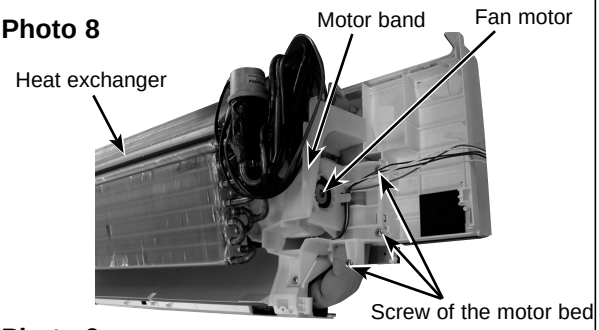 **Photo 9** 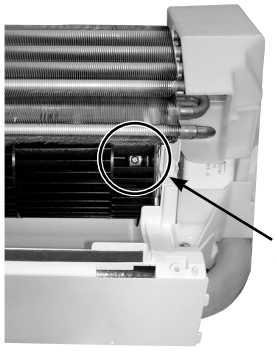
7. REMOVING THE VANE MOTOR (1) Remove the nozzle assembly. (Refer to procedure 5) (2) Remove the screws of the vane motor unit, and pull out the vane motor unit. (3) Remove the screws of the vane motor unit cover. (4) Remove the vane motor from the vane motor unit. (5) Disconnect the connector from the vane motor.	**Photo 11** 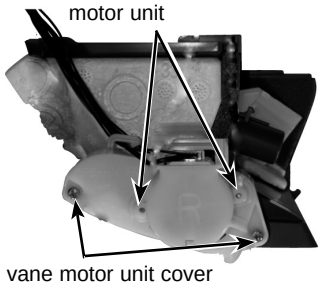
8. REMOVING THE LIQUID PIPE THERMISTOR AND GAS PIPE THERMISTOR (1) Remove the front panel. (Refer to procedure 2) (2) Remove the electrical box cover. (See Photo 3) (3) Remove the motor band. (4) Cut the wiring fixed band. (5) Remove the liquid pipe thermistor and gas pipe thermistors. (6) Disconnect the connector (CN44) (CN2G) on the indoor controller board. (TH22 and TH23/CN44, TH24/CN2G)	**Photo 12** 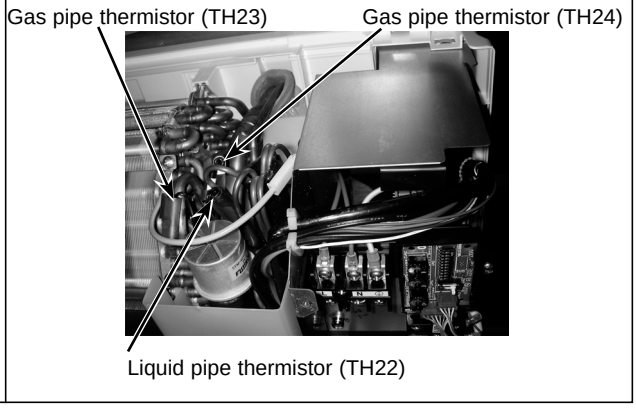

OPERATION PROCEDURE	PHOTOS
9. REMOVING THE HEAT EXCHANGER AND LEV (1) Remove the front panel (Refer to procedure 2) and the corner panel at right lower side. (2) Remove the electrical box (Refer to procedure 4) and the nozzle assembly (Refer to procedure 5). (3) Remove the motor band. (4) Remove the pipe thermistors (Refer to procedure 8). (5) Disconnect the connector (CN60) on the indoor controller board and the connector for ground wire. (See Photo 5) (6) Remove the screws fixing the left side of the heat exchanger. (See Photo 9) (7) Remove the heat exchanger with LEV.	**Photo 13** 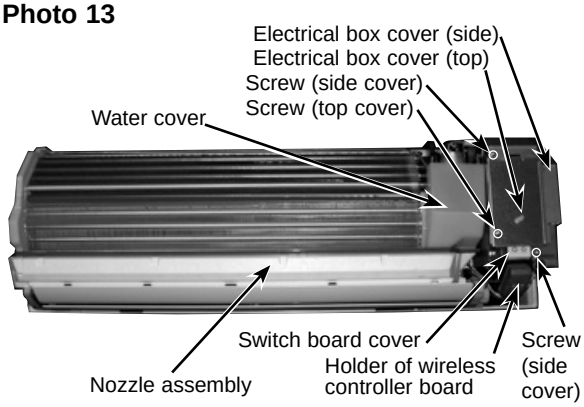 **Photo 14** 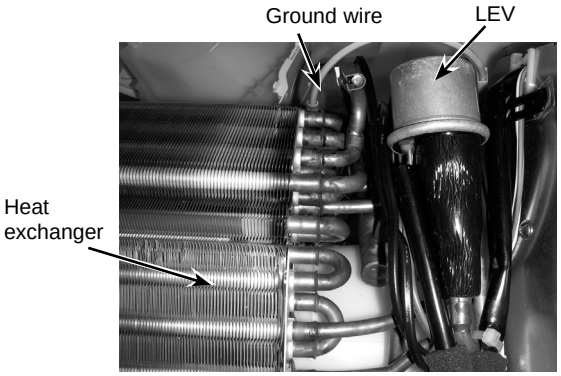
10. REMOVING THE ROOM TEMPERATURE THERMISTOR (1) Remove the front panel (Refer to procedure 2). (2) Remove the electrical box cover. (See Photo 3) (3) Remove the room temperature thermistor. (4) Disconnect the connector (CN20) on the indoor controller board. **NOTE: When room temp. thermistor is replaced, be sure to use service parts No. R01 N20 202.** **Photo 16** 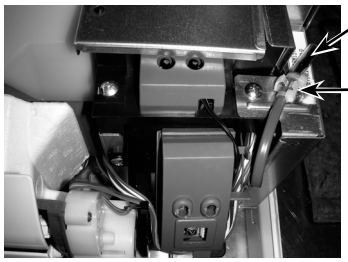 **Caution:** **There is a case that room temp. thermistor (TH21) is fixed with electrical box side cover screw.**	**Photo 15** 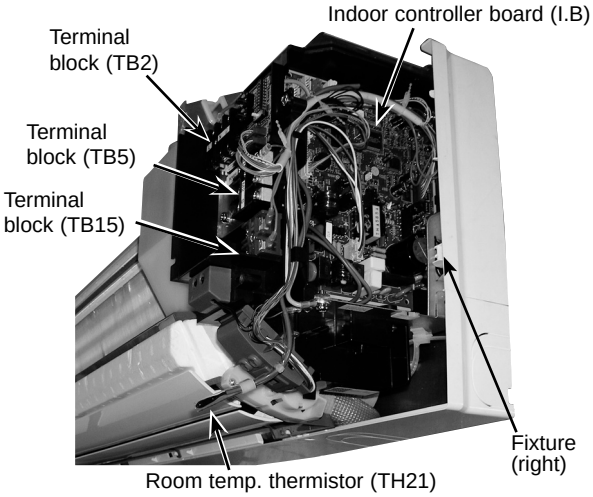

CITY MULTI™

MITSUBISHI ELECTRIC CORPORATION

HEAD OFFICE : TOKYO BLDG., 2-7-3, MARUNOUCHI, CHIYODA-KU TOKYO 100-8310, JAPAN

Distributed in Dec. 2012 No. OCH442 REVISED EDITION-B
Distributed in Feb. 2009 No. OCH442 REVISED EDITION-A PDF 7
Distributed in Jul. 2008 No. OCH442 PDF 7
Made in Japan

New publication, effective Dec. 2012
Specifications are subject to change without notice.