<ORIGINAL>

MITSUBISHI ELECTRIC

Hot Water Heat Pump Unit

QAHV

QAHV-N560YA-HPB(-BS)

For use with R744

Installation/Operation Manual en
Installations-/Bedienungsanleitung de
Manuel d'installation et d'utilisation fr
Installatie-/gebruikshandleiding nl
Manual de instalación/operación es

WT10996X04

Contents

1. Safety Precautions 4
1-1. General 4
1-2. Transportation 7
1-3. Installation 8
1-4. Pipe installation 8
1-5. Electrical wiring 9
1-6. Transportation and repairs 10
2. Selecting the Installation Site 11
2-1. Installation Conditions 11
2-1-1. Protection against winds 11
2-1-2. Cold Climate Installation 11
2-2. Installation Space Requirements 12
2-2-1. Single unit installation 12
2-2-2. Multiple unit installation 13
2-2-3. System installation restrictions 15
3. Unit Installation 16
4. Water Pipe Installation 17
4-1. Piping System Schematic 17
4-1-1. Heater installation example 18
4-2. Notes on Pipe Corrosion 21
4-3. Water Pipe Hole Size and Location 22
4-4. Water-supply pipe 22
4-5. Outlet check valve 22
4-6. Pipe gradient and air venting valve 23
4-7. Safety valve 23
4-8. Vacuum breaker 23
4-9. Expansion tank 24
4-10. Important notes for facilities with a long period of an absence of hot-water supply load 24
4-11. Secondary side control system 25
4-11-1. Notes on configuring and selecting components 26
4-11-2. Notes on other piping work 32
4-11-3. Optional parts 34
4-11-4. Setting method for secondary side control 34
5. System Configurations 35
5-1. Test run procedural flow 35
5-2. Schematic Diagrams of Individual and Multiple Systems 35
5-2-1. Individual system 35
5-2-2. Multiple system 36
5-3. Switch Types and the Factory Settings 36
5-3-1. Switch names and functions 36
5-3-2. Different types of switches on the PCB 37
5-3-3. Factory Switch Settings (Dip switch settings table) 38
5-4. Configuring the Settings 39
5-4-1. Table of settings items 39
5-4-2. Making the settings 41
5-4-3. System configuration procedures: Individual system 43
5-4-4. System configuration procedures: Multiple system 45
5-4-5. Slide switch (SWS1) settings 48
5-4-6. Re-initializing the system 48
5-4-7. Resetting the system 48
5-5. Air bleeding operation and flow rate adjustment operation during test run 49
5-5-1. Air bleeding operation 49
5-5-2. Water flow rate adjustment operation (when the secondary side control is disabled) 51

Contents

5-5-3. Water flow rate adjustment operation (when the secondary side control is enabled) 53
5-6. Water-temperature setting 56
5-6-1. Sensor method settings 56
5-6-2. Three-sensor method or six-sensor method setting 57
5-6-3. Setting the outlet hot water temperature 60
5-6-4. Setting the water temperature using analog signal input 63
5-6-5. Scheduled operation 63
5-6-6. Peak-demand control operation 64
5-6-7. Setting the total number of units for a multiple system 65
5-6-8. Selecting the item that normally appears on the LED 66
6. Electrical Wiring Installation 67
6-1. Main Power Supply Wiring and Switch Capacity 67
6-2. Wiring for Configuring Secondary Side Control System 69
6-3. Cable Connections 71
6-4. Precautions when fastening screws 73
6-5. Wire Knockout Hole and Conduit 74
6-6. Electrical Wiring Diagram 75
6-7. External Input/Output 77
7. Troubleshooting 79
7-1. Diagnosing Problems with No Available Error Codes 79
7-2. Diagnosing Problems Using Error Codes 80
7-3. Calling for Service 84
8. Operating the Unit 85
8-1. Initial Operation 85
8-2. Daily Operation 85
8-3. Using Units in Cold Climates 86
8-4. Remote Controller Operation 87
8-4-1. Power ON/OFF 87
8-4-2. Setting the operation mode and temperature 88
8-4-3. Using the Weekly timer 89
8-4-4. Using the Period timer 90
8-4-5. Using power save 92
8-4-6. Setting the functions 95
8-4-7. Monitoring the operating status from the remote controller 97
9. Specifications 99
10. Maintenance 102

1. Safety Precautions

- **Thoroughly read this manual prior to use.**
- **Save this manual for future reference.**
- **Some of the items in this manual may not apply to made-to-order units.**
- **Make sure that this manual is passed on to the end users.**
- **Thoroughly read the following safety precautions prior to use.**
- **Observe these precautions carefully to ensure safety.**

⚠ WARNING	Indicates a risk of death or serious injury
⚠ CAUTION	Indicates a risk of injury or structural damage
IMPORTANT	Indicates a risk of damage to the unit or other components in the system

All electric work must be performed by personnel certified by Mitsubishi Electric.

1-1. General

⚠ WARNING

Do not use refrigerant other than the type indicated in the manuals provided with the unit and on the nameplate.

- Doing so may cause the unit or pipes to burst, or result in explosion or fire during use, during repair, or at the time of disposal of the unit.
- It may also be in violation of applicable laws.
- MITSUBISHI ELECTRIC CORPORATION cannot be held responsible for malfunctions or accidents resulting from the use of the wrong type of refrigerant.

Do not install the unit in a place where large amounts of oil, steam, organic solvents, or corrosive gases, such as sulfuric gas, ammonia, and sulfide are present or where acidic/alkaline solutions or sprays containing sulfur are used frequently.

- These substances can compromise the performance of the unit or cause certain components of the unit to corrode, which can result in refrigerant leakage, water leakage, injury, electric shock, malfunctions, smoke, or fire.

Do not try to defeat the safety features of the unit or make unauthorized setting changes.

- Forcing the unit to operate the unit by defeating the safety features of the devices such as the pressure switch or the temperature switch, making unauthorized changes to the switch settings, or using accessories other than the ones recommended by Mitsubishi Electric may result in smoke, fire, or explosion.

To reduce the risk of fire or explosion, do not use volatile or flammable substances as a heat carrier.

To reduce the risk of burns or electric shock, do not touch exposed pipes and wires.

To reduce the risk of shorting, current leakage, electric shock, malfunctions, smoke, or fire, do not splash water on electric parts.

To reduce the risk of electric shock, malfunctions, smoke or fire, do not operate the switches/buttons or touch other electrical parts with wet hands.

To reduce the risk of electric shock and injury from the fan or other rotating parts, stop the operation and turn off the main power before cleaning, maintaining, or inspecting the unit.

To reduce the risk of burns or frost bites, do not touch the refrigerant pipes or refrigerant circuit components with bare hands during and immediately after operation.

Before cleaning the unit, switch off the power. (Unplug the unit, if it is plugged in.)

To reduce the risk of injury, keep children away while installing, inspecting, or repairing the unit.

Children should be supervised to ensure that they do not play with the appliance.

This appliance is not intended for use by persons (including children) with reduced physical, sensory or mental capabilities, or lack of experience and knowledge, unless they have been given supervision or instruction concerning use of the appliance by a person responsible for their safety.

Keep the space well ventilated. Refrigerant can displace air and cause oxygen starvation.
- If leaked refrigerant comes in contact with a heat source, toxic gas may be generated.

Always replace a fuse with one with the correct current rating.
- The use of improperly rated fuses or a substitution of fuses with steel or copper wire may result in fire or explosion.

If any abnormality (e.g., burning smell) is noticed, stop the operation, turn off the power switch, and consult your dealer.
- Continuing the operation may result in electric shock, malfunctions, or fire.

Properly install all required covers and panels on the terminal box and control box to keep moisture and dust out.
- Dust accumulation and water may result in electric shock, smoke, or fire.

Consult an authorized agency for the proper disposal of the unit.
- Refrigerant oil and refrigerant that may be left in the unit pose a risk of fire, explosion, or environmental pollution.

The appliance shall be stored in a room without continuously operating ignition sources (for example: open flames, an operating gas appliance or an operating electric heater.)

Do not pierce or burn.

Be aware that refrigerants may not contain an odour.

⚠ CAUTION

To reduce the risk of fire or explosion, do not place flammable materials or use flammable sprays around the unit.

Do not operate the unit without panels and safety guards properly installed.

To reduce the risk of injury, do not sit, stand, or place objects on the unit.

Do not connect the makeup water pipe directly to the potable water pipe. Use a cistern tank between them.
- Connecting these pipes directly may cause the water in the unit to migrate into the potable water and cause health problems.

To reduce the risk of adverse effects on plants and animals, do not place them where they are directly exposed to discharge air from the unit.

Do not install the unit on or over things that are vulnerable to water damage.
- Condensation may drip from the unit.

The model of heat pump unit described in this manual is not intended for use to preserve food, animals, plants, precision instruments, or art work.

To reduce the risk of injury, do not touch the heat exchanger fins or sharp edges of components with bare hands.

Do not place a container filled with water on the unit.
- If water spills on the unit, it may result in shorting, current leakage, electric shock, malfunction, smoke, or fire.

Always wear protective gears when touching electrical components on the unit.
- Several minutes after the power is switched off, residual voltage may still cause electric shock.

To reduce the risk of injury, do not insert fingers or foreign objects into air inlet/outlet grills.

To reduce the risk of injury, wear protective gear when working on the unit.

Do not release refrigerant into the atmosphere. Collect and reuse the refrigerant, or have it properly disposed of by an authorized agency.
- Refrigerant poses environmental hazards if released into the air.

The water heated by the heat pump is not suitable for use as drinking water or for cooking.
- It may cause health problems or degrade food.

If the ambient temperature drops below 0°C, install a freeze protection heater and always keep the unit's main power and the heater ON to prevent the water in the pipes from freezing. If the ambient temperature drops below 0°C while the unit is turned off and not in use, drain the water from the pipes.
- If the ambient temperature drops below 0°C, take measures to prevent the water circuit from freezing.
- If the main power is turned off, the automatic freeze prevention control will not operate, and the frozen water circuit may damage the unit.
- Do not use brine while the unit is either in operation or stopped.

In areas where temperature drops to freezing, use an anti-freeze circuit and leave the main power turned on to prevent the water in the water circuit from freezing and damaging the unit or causing water leakage and resultant damage to the furnishings.

Use clean tap water.
- The use of acidic or alkaline water or water high in chlorine may corrode the unit or the pipes, causing water leakage and resultant damage to the furnishings.

In areas where temperature can drop low enough to cause the water in the pipes to freeze, operate the unit often enough to prevent the water from freezing.
- Frozen water in the water circuit may cause the water to freeze, resulting in burst pipes and damage to the unit or the furnishings.

Periodically inspect and clean the water circuit.
- Dirty water circuit may compromise the unit’s performance or corrodes the unit or cause water leakage and resultant damage to the furnishings.

Ensure that the flow rate of the feed-water is within the permitted range.
- If the flow rate exceeds the permitted range, the unit may become damaged due to corrosion. Furniture may become wet due to water leaks.

Do not install the unit in an enclosed space or a semi-underground space.
- If the refrigerant leaks, a fire may result.
- The unit must be stored where leaking refrigerant will not accumulate.
- Store the unit in a room large enough to allow clearance in the event of refrigerant leakage.

To avoid damage to the unit, use appropriate tools to install, inspect, or repair the unit.

To reduce the risk or malfunction, turn on the power at least 12 hours before starting operation, and leave the power turned on throughout the operating season.

Do not unnecessarily change the switch settings or touch other parts in the refrigerant circuit.
- Doing so may change the operation mode or damage the unit.

To reduce the risk of malfunctions, use the unit within its operating range.

Do not switch on or off the main power in a cycle of shorter than 10 minutes.
- Short-cycling the compressor may damage the compressor.

When servicing the refrigerant, open and close the check joint using two spanners, as there is the risk of refrigerant leaking due to damaged piping.



Please build the water circuit so that it is a closed system.
- Do not use water directly for showers or other applications.
- Do not allow other heat source water to mix with the water circuit.

Take appropriate measures against electrical noise interference when installing the unit in hospitals or facilities with radio communication capabilities.
- Inverter, high-frequency medical, or wireless communication equipment as well as power generators may cause the unit to malfunction. The unit may also adversely affect the operation of these types of equipment by creating electrical noise.

Check the water system, using a relevant manual as a reference.
- Using the system that does not meet the standards (including water quality and water flow rate) may cause the water pipes to corrode.

Have a backup system, if failure of the unit has a potential for causing significant problems or damages.

This appliance is intended to be used by expert or trained users in shops, in light industry and on farms, or for commercial use by lay persons.

1-2. Transportation

⚠ WARNING

Lift the unit by placing the slings at designated locations. Support the unit securely at four points to keep it from slipping and sliding.
- If the unit is not properly supported, it may fall and cause personal injury.

⚠ CAUTION

To reduce the risk of injury, do not carry the product by the PP bands that are used on some packages.

Observe the restrictions on the maximum weight that a person can lift, which is specified in local regulations.

1-3. Installation

⚠ WARNING

Do not install the unit where there is a risk of leaking flammable gas.
- If flammable gas accumulates around the unit, it may ignite and cause a fire or explosion.

Properly dispose of the packing materials.
- Plastic bags pose suffocation hazard to children.

The unit should be installed only by personnel certified by Mitsubishi Electric according to the instructions detailed in the Installation/Operation Manual.
- Improper installation may result in refrigerant leakage, water leakage, injury, electric shock, or fire.

Periodically check the installation base for damage.
- If the unit is left on a damaged base, it may fall and cause injury.

Remove packing materials from the unit before operating the unit. Note that some accessories may be taped to the unit. Properly install all accessories that are required.
- Failing to remove the packing materials or failing to install required accessories may result in refrigerant leakage, oxygen starvation, smoke, or fire.

Consult your dealer and take appropriate measures to safeguard against refrigerant leakage and resultant oxygen starvation. An installation of a refrigerant gas detector is recommended.

Any additional parts must be installed by qualified personnel. Only use the parts specified by Mitsubishi Electric.

Take appropriate safety measures against wind gusts and earthquakes to prevent the unit from toppling over and causing injury.

Be sure to install the unit horizontally, using a level.
- If the unit is installed at an angle, it may fall and cause injury or cause water leakage.

The unit should be installed on a surface that is strong enough to support its weight.

⚠ CAUTION

Do not install the unit on or over things that are vulnerable to water damage.
- When the humidity exceeds 80% or if the drain water outlet becomes clogged, condensation may drip from the unit.

All drainage work should be performed by the dealer or qualified personnel according to the instructions detailed in the Installation Manual.
- Improper drainage work may cause rain water or drain water to enter the buildings and damage the furnishings.

To maintain optimum performance and reduce the risk of malfunction, keep the air pathway clear.

1-4. Pipe installation

⚠ WARNING

To prevent explosion, do not heat the unit with refrigerant gas in the refrigerant circuit.

Do not pull out the grounding wire coming from the unit during welding work.

Check for refrigerant leakage at the completion of installation.
- If leaked refrigerant comes in contact with a heat source, toxic gas may be generated.

⚠ CAUTION

Check that no substance other than the specified refrigerant is present in the refrigerant circuit.
- Infiltration of other substances may cause the pressure to rise abnormally high and cause the pipes to explode.

To keep the ceiling and floor from getting wet due to condensation, properly insulate the pipes.

Piping work should be performed by the dealer or qualified personnel according to the instructions detailed in the Installation Manual.
- Improper piping work may cause water leakage and damage the furnishings.

To keep the ceiling and floor from getting wet due to condensation, properly insulate the pipes.

Do not open the control box cover while charging refrigerant.
- If the refrigerant leaks, a fire may result.

1-5. Electrical wiring

⚠ WARNING

To reduce the risk of wire breakage, overheating, smoke, and fire, keep undue force from being applied to the wires.

Properly secure the cables in place and provide adequate slack in the cables so as not to stress the terminals.
- Improperly connected cables may break, overheat, and cause smoke or fire.

To reduce the risk of injury or electric shock, switch off the main power before performing electrical work.

All electric work must be performed by a qualified electrician according to the local regulations, standards, and the instructions detailed in the Installation Manual.
- Capacity shortage to the power supply circuit or improper installation may result in malfunction, electric shock, smoke, or fire.

To reduce the risk of electric shock, smoke, or fire, install an earth leakage breaker on the power supply to each unit.

Use properly rated breakers and fuses (an earth leakage breaker, local switch <a switch + fuse that meets local electrical codes>, or overcurrent breaker).
- The use of improperly rated breakers may result in electric shock, malfunction, smoke, or fire.

To reduce the risk of current leakage, overheating, smoke, or fire, use properly rated cables with adequate current carrying capacity.

Keep the unsheathed part of cables inside the terminal block.
- If unsheathed part of the cables come in contact with each other, electric shock, smoke, or fire may result.

Proper grounding must be provided by a qualified personnel. Do not connect the grounding wire to a gas pipe, water pipe, lightning rod, or telephone wire.
- Improper grounding may result in electric shock, smoke, fire, or malfunction due to electrical noise interference.

Tighten all terminal screws to the specified torque.
- Loose screws and contact failure may result in smoke or fire.

Only use standard power cables of sufficient capacity.
- Failure to do so may result in current leakage, overheating, smoke, or fire.

⚠ CAUTION

To reduce the risk of current leakage, wire breakage, smoke, or fire, keep the wiring out of contact with the refrigerant pipes and other parts, especially sharp edges.

To reduce the risk of electric shock, shorting, or malfunctions, keep wire pieces and sheath shavings out of the terminal block.

To reduce the risk of both the breaker on the product side and the upstream breaker from tripping and causing problems, split the power supply system or provide protection coordination between the earth leakage breaker and overcurrent breaker.

To reduce the risk of power capacity shortage, always use a dedicated power supply circuit.

1-6. Transportation and repairs

⚠ WARNING

The unit should be moved, disassembled, or repaired only by qualified personnel. Do not alter or modify the unit.
- Improper repair or unauthorized modifications may result in refrigerant leakage, water leakage, injury, electric shock, or fire.

After disassembling the unit or making repairs, replace all components as they were.
- Failing to replace all components may result in injury, electric shock, or fire.

If the supply cord is damaged, it must be replaced by the manufacturer, its service agent or similarly qualified persons in order to avoid a hazard.

Recover all refrigerant from the unit.
- It is punishable by law to release refrigerant into the atmosphere.

⚠ CAUTION

To reduce the risk of shorting, electric shock, fire, or malfunction, do not touch the circuit board with tools or with your hands, and do not allow dust to accumulate on the circuit board.

Do not open the control box cover while charging refrigerant.
- If the refrigerant leaks, a fire may result.

2. Selecting the Installation Site

2-1. Installation Conditions

Select the installation site in consultation with the client.

Select a site to install the outdoor unit that meets the following conditions:

- This unit is for outdoor installation only.
- The unit will not be subject to heat from other heat sources.
- The noise from the unit will not be a problem.
- The unit will not be exposed to strong winds.
- Water from the unit can be drained properly.
- To reduce the risk of fire, do not install the unit in a place where a flammable gas may be generated, migrate into, stagnate, or leak out into.
- Do not install the unit in a place where acidic solution or sulfuric sprays are frequently used.
- Do not install the unit in a place where large amounts of oil, steam, organic solvents, or corrosive gases, such as sulfuric gas, ammonia, and sulfide, are present.
- The space requirementsare met. Refer to the specified pages. "Installation Space Requirements" (p. 12)

2-1-1. Protection against winds

Using the figures below as a reference, provide adequate protection against winds.

A unit installed alone is vulnerable to strong winds. Select the installation site carefully to minimize the effect of winds.

When installing a unit in a place where the wind always blows from the same direction, install the unit so that the outlet faces away from the direction of the wind.

Each unit requires the amount of air flow listed in the table at right. Leave sufficient space around the unit for proper ventilation, and take the duct pressure loss into consideration when connecting a discharge duct.

Standard air flow rate	220 m^3/min
Minimum required air flow rate	200 m^3/min
Allowable external static pressure	10 Pa

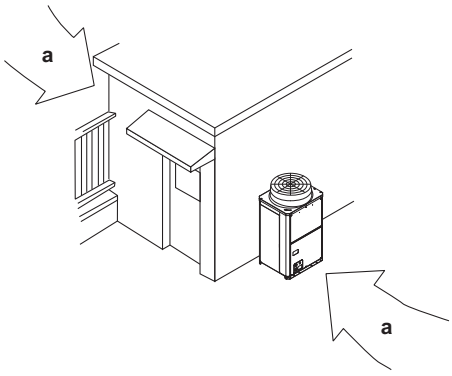

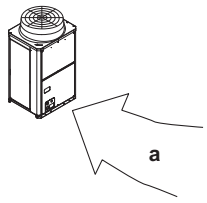

a Wind

- Install the outdoor unit in a place where it is not exposed to direct wind, such as behind a building.
- Install the outdoor unit so that the outlet/inlet faces away from the wind.

2-1-2. Cold Climate Installation

Observe the following when installing the units in areas where snow or strong winds prevail.

- Avoid direct exposure to rain, winds, and snow.
- Icicles that may form under the foundation can fall and inflict personal injury or property damage. Select the installation site carefully to reduce these risks, especially when installing the unit on a roof.
- If the units are installed in the direct line of rain, winds, or snow, install the optional snow hood (on both the discharge and suction ducts). Use a snow net or snow fence as necessary to protect the unit.
- Install the unit on a base approximately twice as high as the expected snowfall.
- If the unit is continuously operated for a long time with the outside air temperature below the freezing point, install a heater at the base of the unit to prevent the water from freezing at the unit bottom.
- When using the unit in an outdoor temperature of -15ºC or below, install a drain pan (with heater whose capacity is 320 W or more) at the bottom surface of the unit.

2-2. Installation Space Requirements

Provide sufficient space around the unit for effective operation, efficient air movement, and ease of access for maintenance.

2-2-1. Single unit installation

Height limit

Front/Right/Left	Same height or lower than the overall height of the unit
Rear	500 mm or lower from the unit bottom

(1) When all walls are within their height limits.

<Unit: mm>

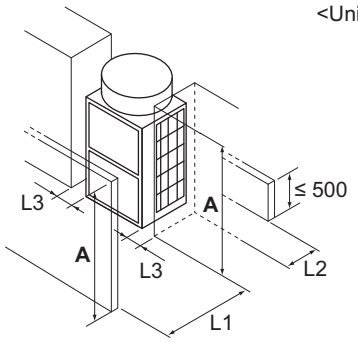

A Unit height

<Unit: mm>

	Required minimum distance		
	L1 (Front)	L2 (Rear)	L3 (Right/Left)
When the distance behind the unit (L2) needs to be small	500	300	50

(2) When one or more walls exceed their height limits.

When the wall(s) at the front and/or the right/left exceed(s) their height limits

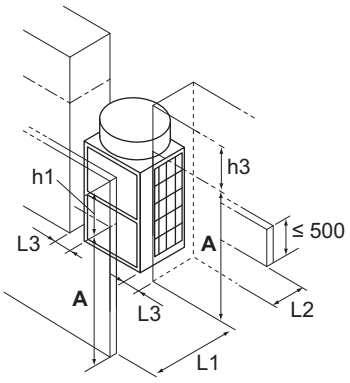

When the wall at the rear exceeds its height limit

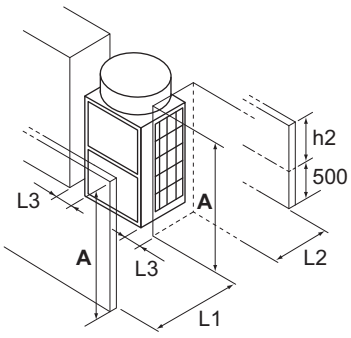

When all walls exceed their height limits

<Unit: mm>

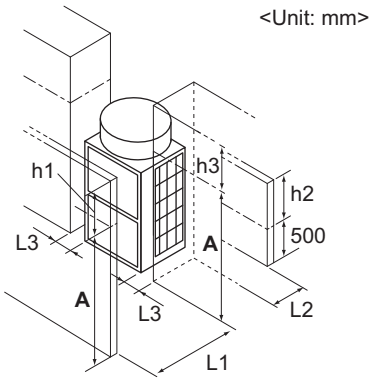

A Unit height

Add the dimension that exceeds the height limit (shown as "h1" through "h3" in the figures) to L1, L2, and L3 as shown in the table below.

<Unit: mm>

	Required minimum distance		
	L1 (Front)	L2 (Rear)	L3 (Right/Left)
When the distance behind the unit (L2) needs to be small	500 + h1	300 + h2	50 + h3

2-2-2. Multiple unit installation

When installing multiple units, make sure to take into consideration factors such as providing enough space for people to pass through, ample space between blocks of units, and sufficient space for airflow. (The areas marked with (*1) in the figures below must be left open.)

In the same way as with the single unit installation, add the dimension that exceeds the height limit (shown as "h1" through "h3" in the figures) to L1, L2, and L3 as shown in the tables below.

(1) Side-by-side installation

<Unit: mm>

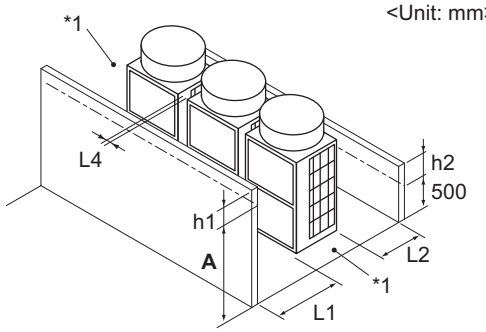

A Unit height

<Unit: mm>

Required minimum distance		
L1 (Front)	L2 (Rear)	L4 (Between)
500 + h1	300 + h2	100

*1:Leave open in two directions.

(2) Face-to-face installation

When there are walls in the front and rear of the block of units

<Unit: mm>

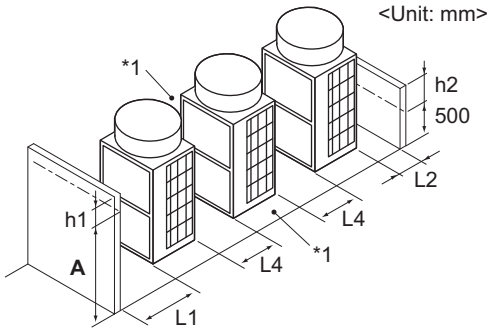

A Unit height

<Unit: mm>

Required minimum distance		
L1 (Front)	L2 (Rear)	L4 (Between)
500	300	500

*1:Leave open in two directions.

When there is a wall on either the right or left side of the block of units

<Unit: mm>

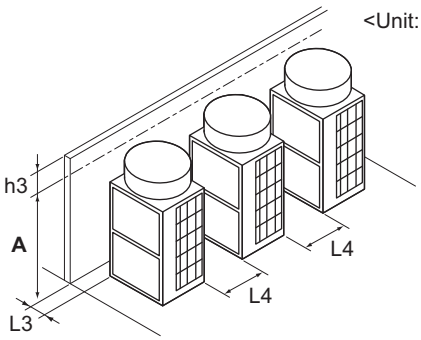

<Unit: mm>

Required minimum distance	
L3 (Right/Left)	L4 (Between)
50 + h3	500

(3) Combination of face-to-face and side-by-side installations

When there are walls in the front and rear of the block of units

<Unit: mm>

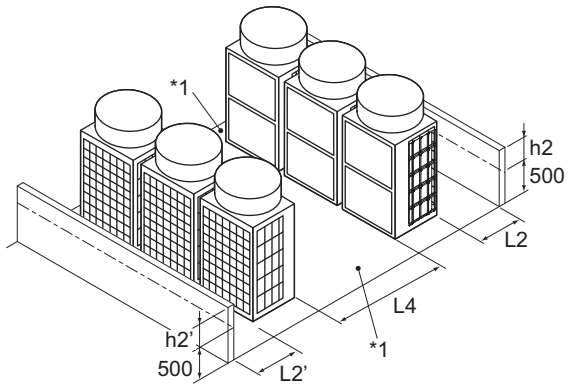

When there are two walls in an L-shape

<Unit: mm>

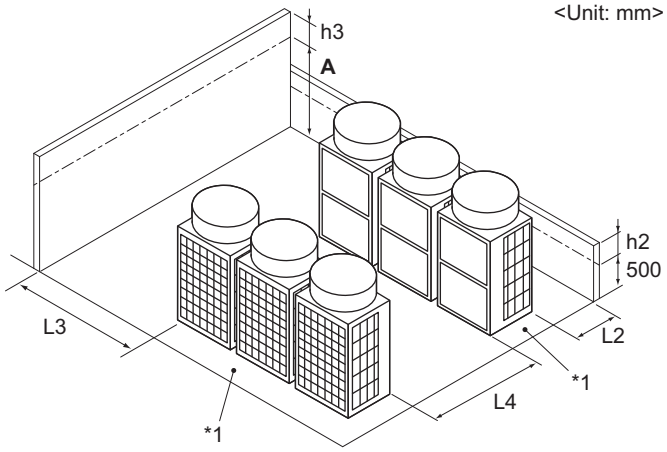

A Unit height

<Unit: mm>

Required minimum distance		
L2 (Right)	L2' (Left)	L4 (Between)
300 + h2	300 + h2'	1000

*1:Leave open in two directions.

<Unit: mm>

Required minimum distance		
L2 (Right)	L3 (Right/Left)	L4 (Between)
300 + h2	1000 + h3	1000

2-2-3. System installation restrictions

Piping length restrictions

The maximum piping length is 60 m. In a system with a secondary-side heat exchanger, make sure that the piping length between the QAHV unit and the heat exchanger is 60 m or less.

Select appropriate diameter pipes to prevent negative pressure from the pumping head and the pressure loss in the pipes.

Pumping head (when maximum flow rate is 17 ℓ/min): 77 kPa

Insufficient water flow may cause the following errors.

(1) Error code: 1105

If heat exchange is blocked at the heat exchanger, the refrigerant temperature will rise, potentially causing a heat exchanger outlet temperature error.

If the refrigerant temperature at the gas cooler outlet stays at 80°C or higher for 20 seconds or more, Error code 1105 will appear, and the unit will stop abnormally.

(2) Error code: 1302

If heat exchange is blocked at the heat exchanger, the refrigerant pressure will rise, potentially causing a high-pressure error.

If the high-pressure switch detects no voltage a certain number of times, or if the pressure remains at 14 MPa or higher for 20 seconds or more, Error code 1302 will appear, and the unit will stop abnormally.

(3) Error code: 2601

If the unit continues to operate with low water flow, a water outage error may occur.

If it is detected that the water flow remains low (2 ℓ/min or less) even when the pump output is at 100% and the water flow control valve is fully open during operation, Error code 2601 will appear, and the unit will stop abnormally.

(4) Error code: 2613

If the unit continues to operate with low water flow, a water flow drop may occur.

If it is detected that the pump residual operation continues for a certain period of time due to low water flow, Error code 2613 will appear. The unit will not stop with Error code 2613, but its operating efficiency will decrease.

If the unit continues to operate with low water flow, it may stop with error codes 1105, 1302, or 2601.

Installation height restrictions

- When the unit is installed above the storage tank
  Decide the height so that the unit inlet water pressure will not be negative for the tank pressure.

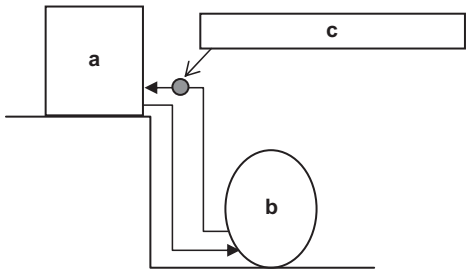

- When the unit is installed below the storage tank
  Decide the height so that the unit inlet water pressure will be 0.5 MPa or below for the tank pressure.

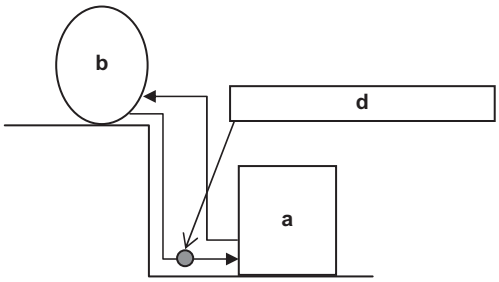

a Heat pump unit
b Storage tank
c Unit inlet water pressure > 0 MPa
d Unit inlet water pressure < 0.5 MPa

3. Unit Installation

Units should be installed only by personnel certified by Mitsubishi Electric.

- Securely fix the unit with bolts to keep the unit from falling down during earthquakes or due to strong winds.
- Install the unit on a foundation made of concrete or iron.
- Noise and vibrations from the unit may be transmitted through the floor and walls. Provide adequate protection against noise and vibration.
- Build the foundation in such way that the corners of the installation legs are securely supported as shown in the figure below. When using rubber vibration isolators, make sure they are large enough to cover the entire width of the unit's legs. If the corners of the legs are not firmly seated, the legs may bend.
- The projecting length of the anchor bolt should be less than 30 mm.
- This unit is not designed to be installed using hole-in anchor bolts unless brackets are used to support the four corners of the unit.
- The legs on the unit are detachable.
- Detaching the legs
  Loosen the three screws on the legs to detach each leg (two each in the front and back). If the finish coat becomes damaged when detaching the legs, be sure to touch it up.

⚠ WARNING

- **Be sure to install the unit on a surface strong enough to withstand its weight to keep the unit from falling down and causing injury.**
- **Provide adequate protection against strong winds and earthquakes. Improper installation may cause the unit to fall down, resulting in personal injury.**

When building the foundation, take the floor strength, water drainage during operation, and piping and wiring routes into consideration.

Precautions for routing the pipes and wires underneath the unit without detachable legs
When routing the pipes and wires underneath the unit, make sure that the foundation will not block the piping access holes. Also, make sure the foundation is at least 100 mm high so that the piping can pass under the unit.

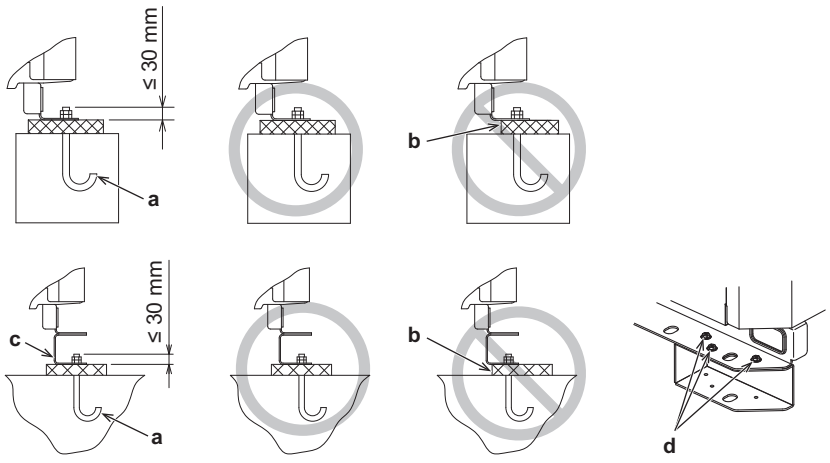

a M10 anchor bolt (field supply)
b Corner is not seated.
c Detachable leg
d Screws

4. Water Pipe Installation

4-1. Piping System Schematic

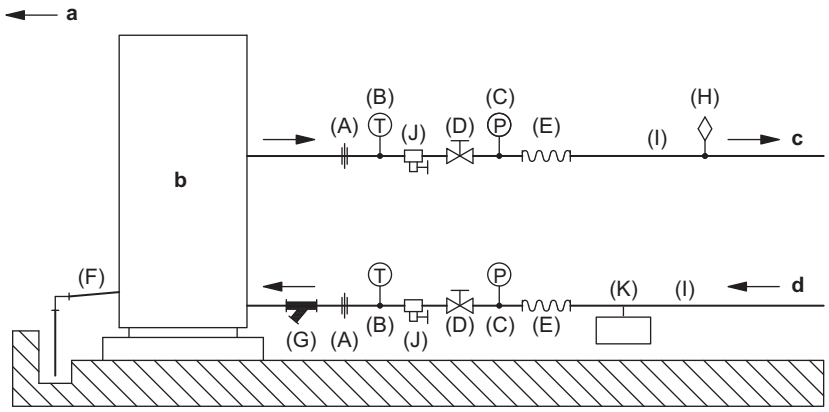

Water piping diagram

a Indicates the direction of the water flow
b Heat pump unit
c To storage tank
d From storage tank

(A)	Union joints/flange joints	Required to allow for a replacement of equipment.
(B)	Thermometer	Required to check the performance and monitor the operation of the units.
(C)	Water pressure gauge	Recommended for checking the operation status.
(D)	Valve	Required to allow for a replacement or cleaning of the flow adjuster.
(E)	Flexible joint	Recommended to install at the inlet/outlet to prevent the noise and vibration from the pump from being transmitted.
(F)	Drain pipe	Install the drain pipe with a downward inclination of between 1/100 and 1/200. To prevent drain water from freezing in winter, install the drain pipe as steep an angle as practically possible and minimize the straight line. For cold climate installation, take an appropriate measure (e.g., drain heater) to prevent the drain water from freezing.
(G)	Strainer	Install a strainer with 60 mesh or better near the unit to keep foreign materials from entering the water-side heat exchanger.
(H)	Air vent valve	Install air venting valves to the places where air can accumulate. Automatic air vent valves are effective.
(I)	Water pipe	Use pipes that allow for easy air purging, and provide adequate insulation. Use pipes made of a material with a minimum thermal tolerance of 90°C (such as SUS, copper, cross-linked polyethylene, or polybutene) for hot-water-supply line. For feed-water line, use pipes made of a material that tolerates the maximum feed-water temperature. Always use pipes made of corrosion resistant materials such as SUS, copper, or resin.
(J)	Drain valve	Install drain valves so that water can be drained for servicing.
(K)	Expansion tank	Select an expansion tank that is suitable for the system.

- Form a closed-loop water system for the indirect heat-exchange system. (Refer to the specified pages. "Notes on configuring and selecting components" (p. 26))
- Flexible hoses cannot be used.
- Installing a freezing prevention heater

1) In cold areas (where the outside temperature drops below freezing), provide a freezing prevention heater at all local pipes to prevent spontaneous freezing.
2) After the heater is installed, check outside temperature +25ºC is ensured at the heat pump unit inlet/outlet pipe joint section (at outside temperature -25ºC, joint section 0ºC or higher).
3) Depending on the local piping material, prevent overheating by selecting a self temperature adjustment type heater or other method.

4-1-1. Heater installation example

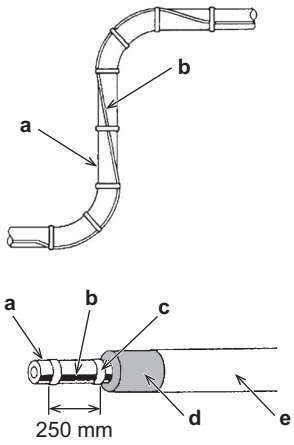

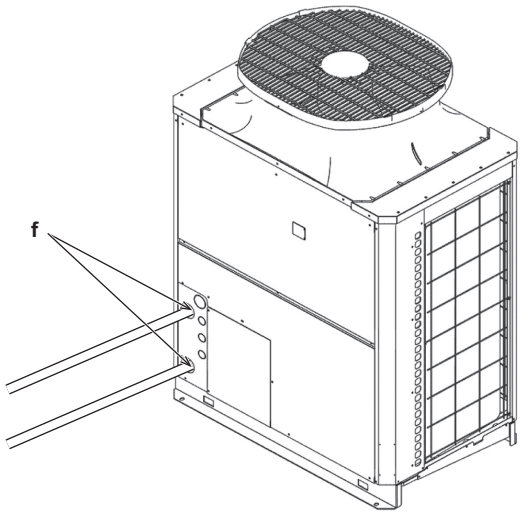

a Piping
b Heater
c Tape
d Heat insulator
- Use a heat insulator material that can withstand the temperature of 100°C and higher.
- Recommended heat insulator material: Glass wool, rock wool

e Outer sheath
f Check outside temperature +25°C is ensured

Pipe size and insulation thickness <Unit: mm>

Pipe size	Heat insulator thickness
25 A or below	30
32 A	40

NOTE

- This product cannot be connected directly to a faucet. Supply all water (including the water supply to mixed water circuit) from a water tank or a make-up tank.

This product is designed for use in the types of systems shown below.

[1] Example QAHV circuit with the usage of only the water storage mode

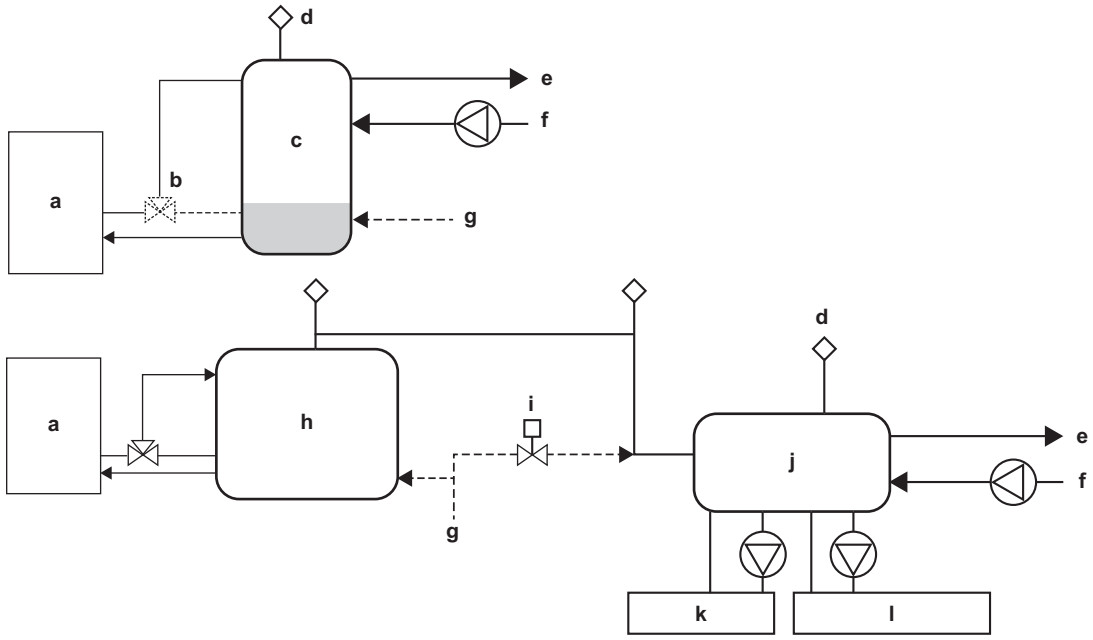

a QAHV system
b Three-way valve
c Hot water tank
d Automatic air-vent valve
e Hot-water supply pipe
f Hot-water return pipe
g Water supply
h Temperature-stratified water tank
i Proportional water valve 60 to 65°C
j Mixed-water tank
k Humidifier with a different heat source
l Heat exchanger for retaining the heat of large bath tubs

QAHV system

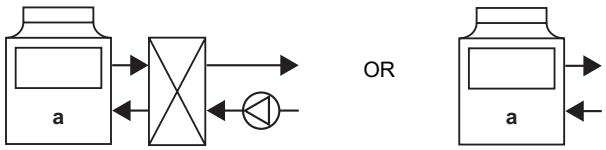

a QAHV

[2] Example QAHV circuit with multiple hot water storage tanks

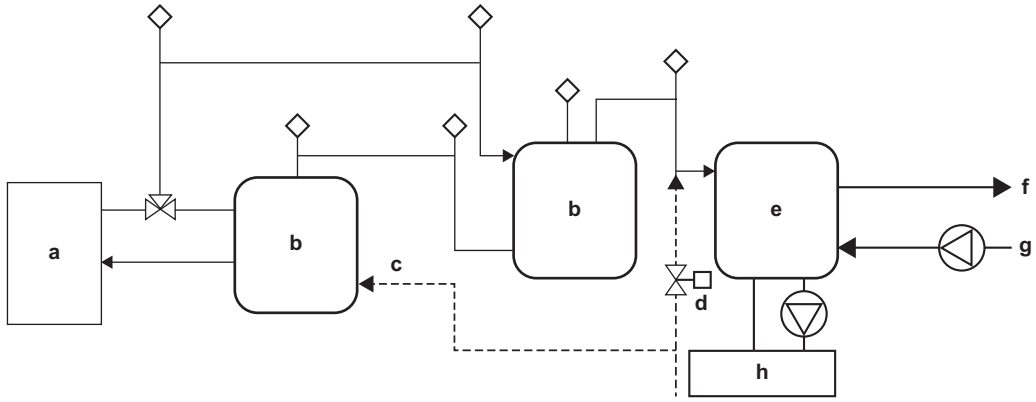

a QAHV system
b Hot water tank
c Water supply
d Proportional water valve 60 to 65°C
e Mixed-water tank
f Hot-water supply pipe
g Hot-water return pipe
h Humidifier with a different heat source

NOTE

- Make sure the proper temperature stratification in the hot water tank is maintained. If the temperature stratification in the hot water tank is lost and the temperature of the lower layer of the water in the hot water tank rises too high, the operation time of the QAHV units may be extended greatly. Also, the amount of dissolved air in the supply water that bubbles up may increase due to the temperature fluctuations while the water is being supplied, which can cause erosion of the water pipe and reduction in wall thickness.
- 3-way valve installation
  Please connect 3-way valve on the lower part of the storage tank except when the unit is in operation. Antifreezing operation will keep the water in the tank circulated and water storage tanks can become thermally stratified.

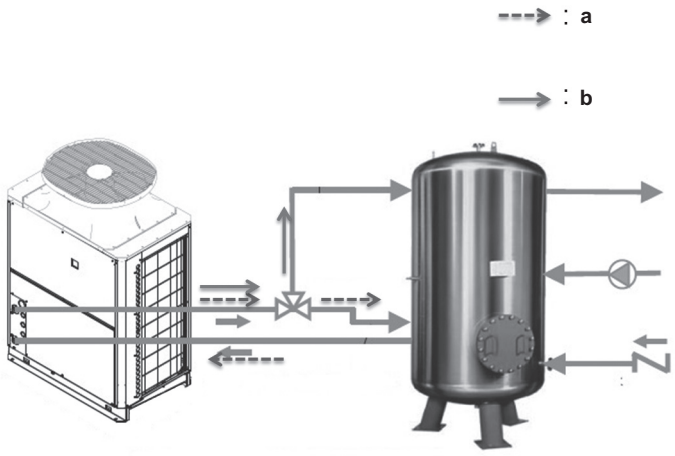

a Anti-freezing operation
Residual running of the pump
b Hot water storage operation

The ON/OFF control of 3-way valve depends on the output type “(r) EXTERNAL DEVICE CONNECTING TERMINAL”. Refer to the specified pages. "External Input/Output" (p. 77)

4-2. Notes on Pipe Corrosion

Water treatment and water quality control

Poor-quality circulating water can cause the water-side heat exchanger to scale up or corrode, reducing heatexchange performance. Properly control the quality of the circulating water.

- Removing foreign objects and impurities in the pipes

  During installation, keep foreign objects, such as welding and sealant fragments and rust, out of the pipes.

[1] Water Quality Control

(1) Poor-quality water can corrode or scale up the heat exchanger. Regular water treatment is recommended.

When using the unit, install a water-to-water heat exchanger etc., and use a closed-loop circuit on the unit side.

en

(2) Water quality standard

Items			Higher mid-range temperature water system Water Temp. > 60ºC	Make-up water criteria (with secondary side control enabled) Water Temp. > 60ºC	Tendency	
			Recirculating water	Recirculating water	Corrosive	Scale-forming
Standard items	pH	(25°C)	6.5 ~ 8.0	6.5 ~ 8.0	○	○
	Electric conductivity	(mS/m) (25°C)	≤ 30	≤ 30	○	○
		(μs/cm) (25°C)	≤ 300	≤ 300		
	Chloride ion	(mg Cl^-/ℓ)	≤ 30	≤ 30	○	
	Sulfate ion	(mg $SO4^{2-}$/ℓ)	≤ 30	≤ 30	○	
	Acid consumption	(pH4.8) (mg $CaCO_3$/ℓ)	≤ 50 (≤ 65) *1	≤ 50 (≤ 65) *1		○
	Calcium hardness	(mg $CaCO_3$/ℓ)	6.5 ≤ pH ≤ 7.5 : ≤ 90 7.5 ≤ pH ≤ 8.0 : ≤ 50	≤ 250		○
	Ionic silica	(mg SiO_2/ℓ)	≤ 30 (≤ 50) *2	≤ 30 (≤ 50) *2		○
Reference items	Iron	(mg Fe/ℓ)	≤ 0.3	≤ 0.3	○	○
	Copper	(mg Cu/ℓ)	≤ 0.1	≤ 0.1	○	
	Sulfide ion	(mg S^{2-}/ℓ)	Undetectable	Undetectable	○	
	Ammonium ion	(mg NH_4^+/ℓ)	≤ 0.1	≤ 0.1	○	
	Residual chlorine	(mg Cl/ℓ)	≤ 0.3	≤ 0.3	○	
	Free carbon dioxide	(mg CO_2/ℓ)	≤ 10.0	≤ 10.0	○	

Reference: Guideline of Water Quality for Refrigeration and Air Conditioning Equipment. (JRA GL02E-1994)

*1: Acid consumption is also called M alkalinity.
Acid consumption exceeding 50 will cause calcium carbonate scaling. If the acid consumption value is between 50 and 65, annual chemical cleansing will be required.
If the acid consumption exceeds 65, a water softener must be installed to keep the calcium hardness to 25 or below.
Acid consumption rises in winter. Conduct a regular water-quality inspection in winter whenever possible.

*2: Ionic silica can cause calcium scale that is hard to remove. If the acid consumption is 50 or below, the figure in the parentheses is the maximum allowable value.

(3) Please consult with a water quality control specialist about water quality control methods and water quality calculations before using anti-corrosive solutions for water quality management.

(4) When replacing an air conditioner (including when only the heat exchanger is replaced), first analyze the water quality and check for possible corrosion.

Corrosion can occur in water systems in which there has been no signs of corrosion. If the water quality level has dropped, adjust the water quality before replacing the unit.

(5) Suspended solids in the water

Sand, pebbles, suspended solids, and corrosion products in water can damage the heating surface of the heat exchanger and cause corrosion. Install a good quality strainer (60 mesh or better) at the inlet of the unit to filter out suspended solids.

(6) Connecting pipes made from different materials

If different types of metals are placed in direct contact with each other, the contact surface will corrode.

Install an insulating material between pipes that are made of different materials to keep them out of direct contact with each other.

4-3. Water Pipe Hole Size and Location

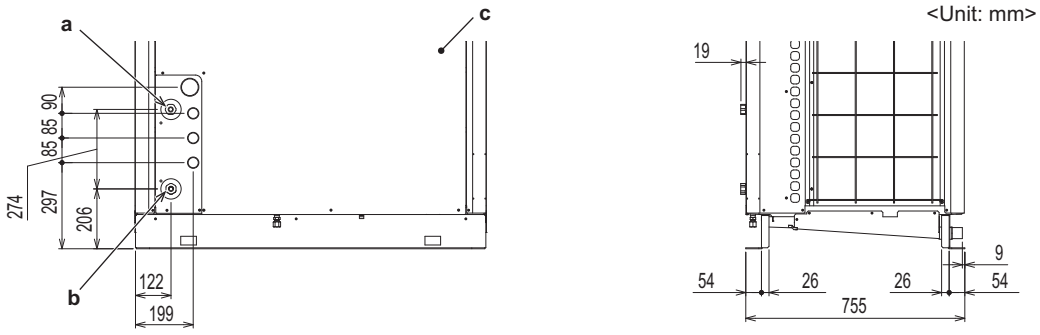

Front view Side view

a Hot water outlet (Bronze Rc3/4, female screw)
b Water inlet (Bronze Rc3/4, female screw)
c Service panel

4-4. Water-supply pipe

Be sure to connect the water-supply pipe to the hot water tank.

Correct Incorrect



a QAHV
b Hot water tank
c Water supply

If the water-supply pipe is connected to the inlet pipe of QAHV, sudden fluctuations in the inlet water temperature during operation (instant 5 K/min or greater or continuous 1 K/min or greater) can cause the unit to come to an abnormal stop (high-pressure, refrigerant gas cooler outlet temperature) or causes the hot water supply temperature to drop.

4-5. Outlet check valve

Required when multiple QAHV units are installed

When connecting multiple QAHV units, install a check valve on the outlet pipe of each unit. Otherwise, a circuit is formed in the unit(s) where hot water backflows when some of the units are operated in the defrost mode or when they are stopped due to an error. Then, other units will come to an abnormal stop due to a sudden change in inlet water temperature.

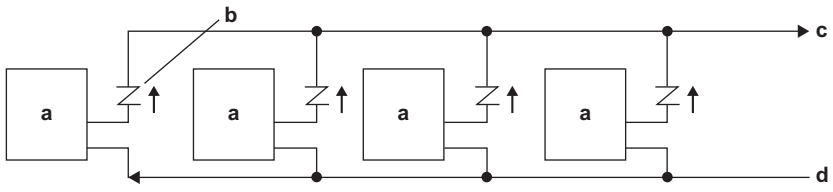

a QAHV
b Check valve
c Hot-water supply pipe
d Inlet water pipe

4-6. Pipe gradient and air venting valve

Outlet hot water pipe

During the hot water storage operation, the air dissolved in the water is discharged in the form of bubbling from the outlet hot water pipe to quickly raise low-temperature water to the required temperature. When the air accumulates in the pipe, the resistance of the water circuit will increase and the flow rate will extremely decrease. Because of this, an installation of automatic air venting valves at the highest point in the pipe line is required when there is a pipe that slopes down in the outlet hot water pipe.
When a large number of QAHV units are connected, the amount of air bubbles will also increase, and the branch pipe or the automatic air-vent valve may not be able to handle the bubbles quickly enough.
If this happens, an air separator may be required to maintain sufficient space volume.
Install the pipe with an upward gradient of 1/200 or more toward the air vent to prevent air accumulation in the pipe.
Also, install air venting valves to the places where air can accumulate. The installation example is shown below.

en

NOTE

- If the crosscut pipe is located lower than the hot water outlet of the heat pump unit, raise the pipe near the unit and install an automatic air venting valve.

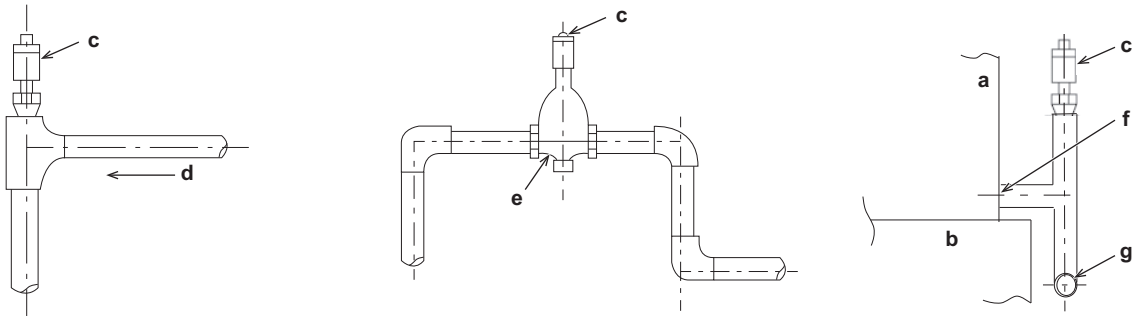

Air venting valve installation example

a Heat pump unit
b Base
c Automatic air venting valve
d Upward gradient 1/200
e Air separator
f Hot water outlet
g Crosscut pipe

4-7. Safety valve

For a closed circuit, a safety valve (relief valve) must be installed to keep the water circuit from bursting.
Also, a relief pipe must be installed to keep the water (or hot water) from the unit from splashing the passersby.

4-8. Vacuum breaker

Install a vacuum breaker (negative pressure valve) to the hot water tank when supplying water to the floor below. Otherwise, when the hot water supply load unexpectedly rises, the supply water shortage can cause a negative pressure inside the hot water tank and cause the tank to become deformed.
The same applies to supplying water to the floor above. Install a vacuum breaker (negative pressure valve) to the hot water tank.

4-9. Expansion tank

Required capacity Vt = K·Vs/(1-P/(P+ΔP))

K: Water expansion coefficient

Vs: Water volume in the system

P: System pressure (make-up water pressure + circulation pump head + atmospheric pressure)

ΔP: Pressure difference between the maximum system pressure and the pressure at startup

= Safety valve setting pressure × 0.9 – (make-up water pressure + circulation pump head)

If this value is small, the required expansion volume will rise.

Water expansion coefficient K

System temperature (T) °C	Make-up water temperature (t) °C						
	5	10	15	20	25	30	35
30	0.0034	0.0032	0.0026	0.0017	0.0005	-	-
35	0.0048	0.0046	0.0040	0.0031	0.0019	0.0005	-
40	0.0066	0.0063	0.0057	0.0049	0.0037	0.0023	0.0006
45	0.0084	0.0082	0.0075	0.0067	0.0055	0.0041	0.0025
50	0.0104	0.0103	0.0099	0.0092	0.0082	0.0070	0.0055
55	0.0126	0.0126	0.0121	0.0114	0.0102	0.0081	0.0078
60	0.0150	0.0149	0.0145	0.0138	0.0128	0.0118	0.0102
65	0.0176	0.0175	0.0171	0.0164	0.0154	0.0142	0.0127
70	0.0203	0.0202	0.0198	0.0191	0.0181	0.0169	0.0154
75	0.0232	0.0230	0.0226	0.0219	0.0209	0.0197	0.0183
80	0.0262	0.0262	0.0257	0.0250	0.0240	0.0228	0.0214
85	0.0294	0.0293	0.0289	0.0282	0.0272	0.0260	0.0246
90	0.0327	0.0327	0.0323	0.0316	0.0306	0.0293	0.0279
95	0.0363	0.0362	0.0358	0.0351	0.0341	0.0329	0.0314

4-10. Important notes for facilities with a long period of an absence of hot-water supply load

(1) Hygiene control

Leave the power switch of the hot-water supply system on to keep the hygienic condition of the hot water tank.

Hot water that was kept in the hot water tank or in the pipe for a long period is not fit for bathing or other human use from the hygienic viewpoint. Before stopping the operation of unit, keep the amount of hot water to a minimum, and drain all water (use for non human use) from the supply end before restarting operation, and use the newly filled water for bathing and for other human use.

NOTE

- If the water is expelled from the pipe to prepare for the stoppage of the unit, the unit will require a trial run (water filling and air-vent) before the unit is operated again. Please have your maintenance provider perform a trail run.

(2) Freeze protection in winter

Freeze protection measures for water circuits need to be taken when the outside temperature drops to 0°C or below.

Leave the power switch of the hot-water facility and the freeze protection heater for the pipes on at all times.

If no power is supplied to the units out of operation, hot water needs to be removed from the piping. The heat exchanger of industrial QAHV will sustain freeze damage if the water is not drained from the pipes properly. Please have the drainage work provided by your maintenance provider.

The unit will require a trial run (water filling and air-vent) before the unit is operated again. Please have your maintenance provider perform a trail run.

4-11. Secondary side control system

When employing an indirect heat exchanger system using a separately sold Q-1SCK, be careful with regard to the following points.

Install the Q-1SCK (flow sensor and temperature sensor) in the secondary side circuit as shown below to perform control.

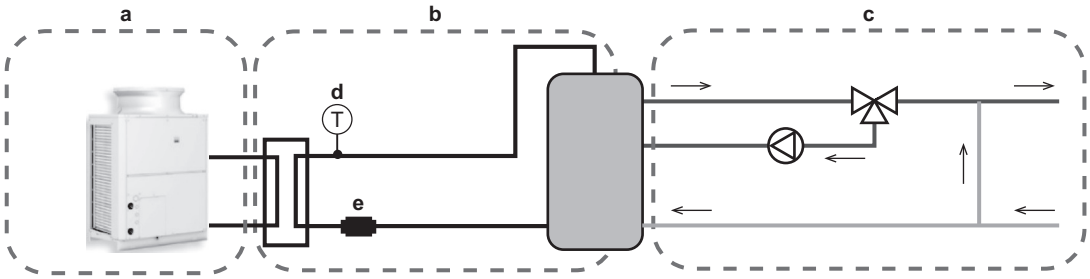

a Unit heating circuit
b Secondary side circuit
c Hot water supply circuit
d Temperature sensor
e Flow sensor

en

4-11-1.Notes on configuring and selecting components

[1] Points to note for secondary side water piping

(1) Details on components in the unit heating circuit

For details, refer to the specified pages. "Piping System Schematic" (p. 17)

(2) Details on components in heat exchanger heating circuit

Schematic Piping Diagram and Piping System Components for secondary circuit

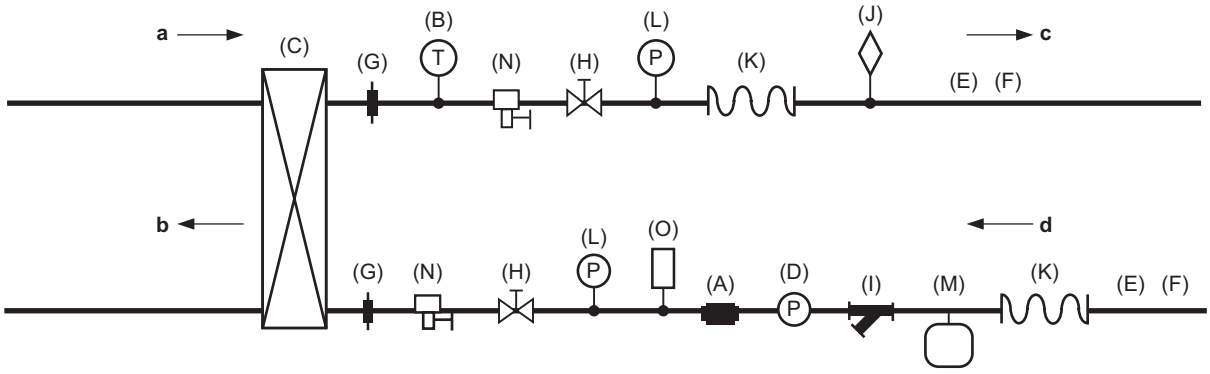

a From heat pump unit
b To heat pump unit
c To storage tank
d From storage tank

No.	Component	Application	Remarks and notes on selecting and installing components
(A)	Flow sensor (Optional parts)	Measures and controls the secondary side flow rate.	Be sure to install this component between the downstream of the flow rate adjustment device and the heat exchanger.
(B)	Temperature sensor (Optional parts)	Measures and controls the secondary side outlet hot water temperature.	Install this component at the outlet of the heat exchanger. Install the sensor near the heat exchanger outlet (within 1 meter of the heat exchanger outlet).
(C)	Plate heat exchanger	Exchanges heat between hot water output from the unit and water input from the tank.	Select a heat exchanger that is appropriate for the capacity.
(D)	Pump + Flow rate adjustment device	Outputs hot water from the secondary side and adjusts the flow rate.	Select a pump and flow rate adjustment device that are suitable for the system. Install them at the lower outlet of the tank.
(E)	Water piping	Water flow channel	Be sure to perform insulation work. Select pipes that allow for easy air bleeding.
(F)	Anti-freeze heater	Prevents pipe damage due to freezing of the water circuit.	This component needs to be installed in a location where an ambient temperature may fall to 0°C or less.
(G)	Union joint	Improves the workability of replacing equipment.	Install these components in the two places of the chilled water passage section and the high temperature water passage section to enable replacement.
(H)	Valve	Improves the workability of cleaning the heat exchanger and replacing parts.	Install these components in the two places of the chilled water passage section and the high temperature water passage section to enable replacement.
(I)	Strainer	Prevents foreign materials from entering into the heat exchanger.	Install a strainer with 60 mesh or better near the heat exchanger.
(J)	Air vent valve	Bleeds air from the pipe.	Install air vents in places where there is a risk of air accumulating.
(K)	Flexible joint	Prevents the propagation of vibration.	These components need to be installed in consideration of the pipe load as pipes are easily damaged by bending.
(L)	Water pressure gauge	Used to check the operation status.	Attach this component to each piping section to check the water pressure.
(M)	Expansion tank	Absorbs excessive water pressure due to expansion caused by a rise in temperature.	Select an expansion tank that is suitable for the system.
(N)	Drain valve	Improves workability of replacing equipment.	Install these components in the two places of the chilled water passage section and the high temperature water passage section to enable replacement.
(O)	Safety valve	Prevents rupturing of the water circuit.	Be sure to provide an escape pipe to prevent discharged water from spraying on passersby.

[2] Selection criteria for heat exchanger

The values below are reference values under the following conditions.

Operation mode: Energy operation mode 1; Secondary side circuit outlet hot water temperature: 65°C; Inlet temperature: 10°C. Determine the specifications based on the actual usage conditions.

(1) Determination of prerequisites for selection

1) Heat exchanger capacity 40000 W

2) Estimation of outlet hot water and inlet water temperatures

As a guide, select a heat exchanger of which the temperature difference between the high temperature section and the low temperature section will be 5°C or below.

Outlet hot water temperature:

When secondary side outlet hot water temperature is set to 65°C (setting at the time of shipment)

- Secondary side circuit outlet hot water temperature: 65°C
- Unit outlet hot water temperature: 70°C

Inlet water temperature:

- Secondary side inlet water temperature: 10°C
- Unit inlet water temperature: 15°C

3) Used flow rate

(40000 W/(70-15)°C/4200 J/kg · K) × 60 s = 10.4 kg/min ≈ 10.4 ℓ/min

(2) Determination of model

Notes on selection

- Select a heat exchanger that allows water to pass through both of the flow channels.
- Select a heat exchanger so that the pressure applied to the heat exchanger in the on-site system will not exceed the maximum operating pressure of the heat exchanger.
- Select a heat exchanger that allows flowing at a flow rate of maximum 30 ℓ/min.
- Select a heat exchanger with a capacity of at least 40000 W.
- Ensure that the shearing stress at the flow rate to be used will be 16 Pa or more. "Calculation of the shearing stress" (p. 28)

To increase the shearing stress:

- When the area per plate is equal, select a vertically long heat exchanger.
- Select a heat exchanger of which NTU is high (although the heat transfer capacity improves as NTU increases, the pressure loss becomes high).

(3) Determination of specifications of the heat exchanger

Determine the model of heat exchanger and number of plates in consultation with the heat exchanger manufacturer based on the above requirements.

- To determine the number of plates, calculate the number of plates while referring to the example below.

Values to use when determining the number of plates:

a) Overall heat transfer coefficient of corresponding heat exchanger

b) Heat transfer area per plate

Calculation method

1) Obtain the data of **a)** and **b)** from the heat exchanger manufacturer.

2) Estimate the number of plates of the heat exchanger.

3) Check that the number of transfer units for the corresponding number of plates matches between NTU1 and NTU2 (NTU1 = NTU2).

If they are matched, select a heat exchanger having the corresponding number of plates. If they are not matched, change the number of plates and then return to 2) to perform the calculation again.

$$NTU1 = \frac{\Delta T1}{\Delta T}$$

$$NTU2 = \frac{K \times A}{V \times C}$$

ΔT1: Temperature difference between inlet and outlet
ΔT: Temperature difference of high temperature part (low temperature part)
K: Overall heat transfer coefficient (W/m^{2}K)
A: Total heat transfer area (m^2)
V: Total mass flow rate (kg/s)
C: Specific heat (J/kgK)

(4) Calculation of the shearing stress

Calculate the shearing stress using the following method.

Values required for calculation

- Relationship between flow rate and pressure loss of corresponding heat exchanger (Obtain the data from the heat exchanger manufacturer.)

Calculation method

Calculate the shearing stress using the following formula.

$$\tau = \frac{\Delta P}{4} \times \frac{\text{Representative length of 1 channel}}{\text{Effective length}}$$

Effective length:
Length between water inlet and water outlet
(refer to the figure on the right)

Representative length of 1 channel:
Distance between plates
(refer to the figure on the right) × 2

ΔP: Pressure loss

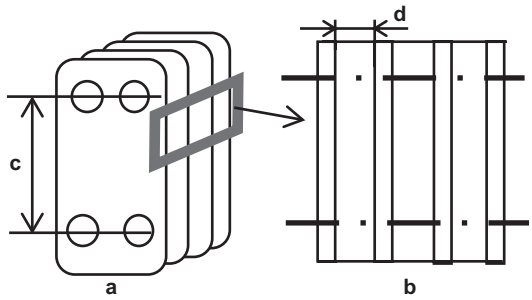

a Front of heat exchanger
b Side of heat exchanger
c Effective length
d Distance between plates

A shearing stress of 16 Pa or higher is required to reduce the amount of scale that adheres.
If the shearing stress is low:

- Select a vertically short shape.
- Change the shape of the plates.

Reselect a heat exchanger that will increase the shearing stress by following methods described above.

[3] Configuration method and selection criteria of flow rate adjustment device

In this system, a flow rate adjustment device is installed in the secondary side circuit to perform secondary side flow rate adjustment control by outputting 0 to 10 V from the unit.

10-V or 12-V power supply is not supplied. Please prepare a DC power supply.

The following shows a system configuration example of the flow rate adjustment device and notes on the system configuration.

The following three system types are recommended as flow rate adjustment devices:

- System using a three-way valve
- System using a two-way valve
- System using an inverter

Power supply	Item code 1517	Control range
10 V	0	For 0-10 V analog output control using an input power supply of 10 V. (Note that the analog output voltage can drop by up to approximately 20% due to attenuation.)
12 V	1	For 2-10 V analog output control using an input power supply of 12 V. Set to 1 to use the equipment (inverter with a built-in pump, etc.) that requires an analog input voltage of 10 V. The minimum analog output value is changeable by setting the digitally set setting 1515. **NOTE** • The minimum allowable input voltage of the equipment to be connected to the analog output is 12 V.

(1) System using a three-way valve

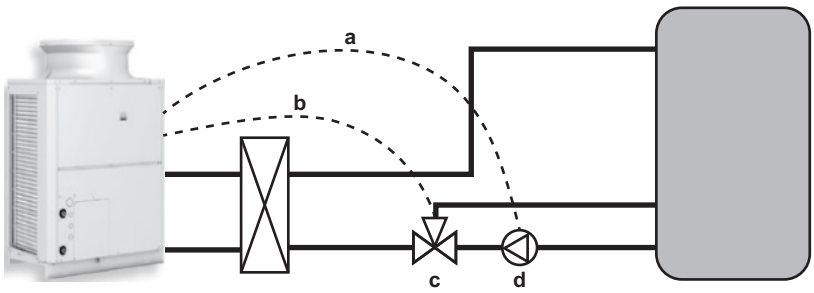

a ON/OFF signal
b 0 to 10 V output
c Three-way valve
d Pump

en

Overview of system
This system has a pump provided at the outlet of the tank and a three-way valve provided downstream of the pump, and adjusts the flow rate by controlling the opening and closing of the three-way valve.

	Flow rate output device	Flow rate adjustment device
	Pump	Three-way valve
Wiring connection places	1-3 of CN512 of control board (ON/OFF output)	Sub box terminal block No. 10, 11, 12

Notes on selection method and system configuration

Notes on pump selection and connection

- Calculate the total pump head according to the system at the site and then select a pump capable of outputting the minimum flow rate of about 3 ℓ/min and maximum flow rate of about 30 ℓ/min with the necessary pump head for the piping at the site.
- When selecting the pump, please note that output at a high flow rate will not occur if the flow rate with the pump head of the system at the site is low, and output at a low flow rate will not occur if the flow rate is too high.
- Be sure to check that the flow rate becomes 20 to 30 ℓ/min at the maximum output during a flow rate adjustment test run.
  For how to check the flow rate, Refer to the following page(s) for detail."Water flow rate adjustment operation (when the secondary side control is enabled)" (p. 53)

*1: If the flow rate is not within the range of 20 to 30 ℓ/min, select a different pump or adjust the maximum frequency using an inverter, etc. so that the maximum flow rate of 20 to 30 ℓ/min is achieved.
*2: To select a proper pump, first select a pump that supports slightly high flow rate, and then adjust the frequency with an inverter so that the flow rate becomes 20 to 30 ℓ/min at the maximum output.
(In that case, an inverter is necessary to be prepared separately.)

Notes on three-way valve selection and connection

- Use a valve that is capable of adjusting the flow rate with a 0 to 10 V input.
- Calculate the Cv value and select a valve that supports an appropriate rate.
- Select a valve of which the ratio of the maximum flow rate and the minimum flow rate will be at least 1:10.
- Place the three-way valve downstream of the pump. Connect one outlet to the heat exchanger.
  Connect the other outlet to the lower part of the tank.
- Carefully read the instruction manual and use the three-way valve in accordance with the usage procedures.

(2) System using a two-way valve

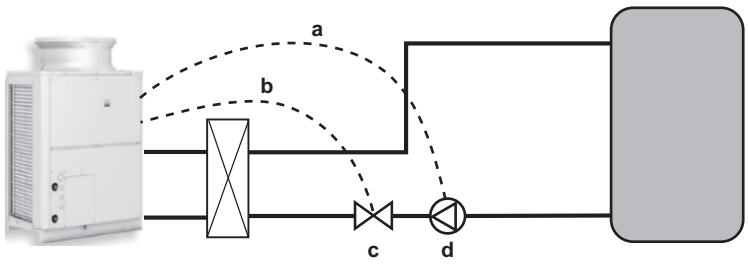

a ON/OFF signal
b 0 to 10 V output
c Two-way valve
d Pump

Overview of system
This system has a pump provided at the outlet of the tank and a two-way valve provided downstream of the pump, and adjusts the flow rate by controlling the opening and closing of the two-way valve.

	Flow rate output device	Flow rate adjustment device
	Pump	Two-way valve
Wiring connection places	1-3 of CN512 of control board (ON/OFF output)	Sub box terminal block No. 10, 11, 12

Notes on pump selection and connection
Select a pump in the same way as for a system with a three-way valve.

Notes on two-way valve selection and connection
- Use a valve that is capable of adjusting the flow rate with a 0 to 10 V input.
- Calculate the Cv value and select a valve that supports an appropriate rate.
- Select a valve of which the ratio of the maximum flow rate and the minimum flow rate will be at least 1:10.
- There are various kinds of two-way valve (such as ball valve, butterfly valve, and globe valve), and there are valves suitable for flow rate adjustment and valves that are not suitable for flow rate adjustment. Therefore be sure to select a two-way valve of a kind capable of precisely controlling the flow rate, such as a butterfly valve or globe valve.
- Place the two-way valve downstream of the pump.
- Carefully read the instruction manual and use the two-way valve in accordance with the usage procedures.

(3) System using an inverter

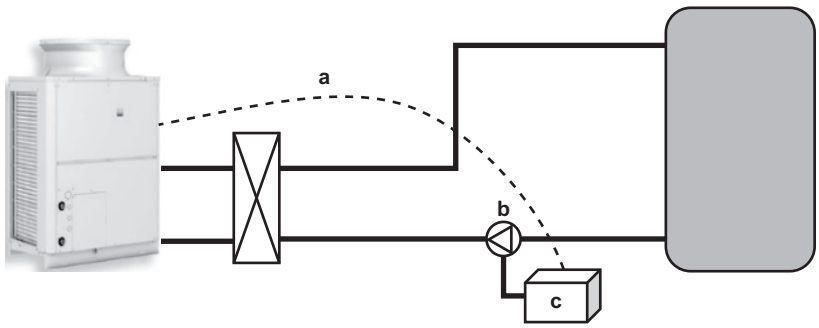

a 0 to 10 V output
b Pump
c Inverter

en

Overview of system

This system has a pump provided at the outlet of the tank and an inverter connected to the pump, and adjusts the flow rate by changing the frequency of the inverter.

	Flow rate output device	Flow rate adjustment device
	Pump	Inverter
Wiring connection places	-	Sub box terminal block No. 10, 11, 12

Notes on pump selection and connection

Select a pump in basically the same way as for a system with a three-way valve or two-way valve.

- Select a pump that can be used also at a low frequency (6 Hz or less).
  (The motor may be seized depending on the pump selected as this control is performed at a low frequency.)
- Select a pump of which flow rate at 100% output is between 20 to 30 ℓ/min.

Notes on inverter selection and connection

- The inverter needs to be able to adjust output with a 0 to 10 V input.
- Select an inverter that will not cause the seizing of the motor.
- Configure the settings so that the flow rate on the secondary side will become 0 ℓ/min when the unit is not operating.
- Carefully read the instruction manual and use the inverter in accordance with the usage procedures.

4-11-2.Notes on other piping work

[1] Notes on installation location of secondary side circuit

Install the secondary side heat exchanger, secondary side thermistor, secondary side flow sensor, and secondary side pump indoors as shown in the figure for the secondary side circuit system. Also, take measures so that the piping will not freeze.

- Be sure to form a closed circuit on the primary side water circuit (the water circuit between QAHV and the secondary side heat exchanger).
- Configure the system so that the temperature difference between the outlet water and the inlet water of the unit is always 20ºC or above. (If the water temperature difference is too small, the supply water temperature becomes uncontrollable.)

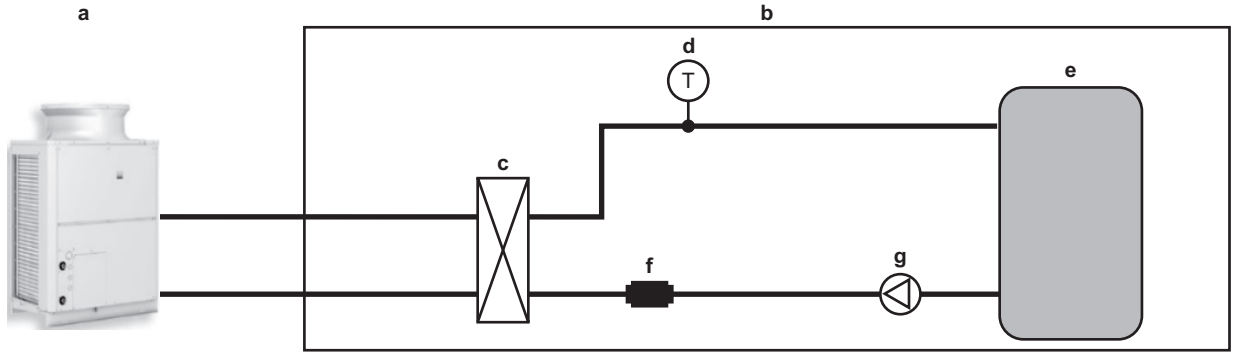

a Installation outdoors
b Installation indoors
c Secondary side heat exchanger
d Secondary side thermistor
e Storage tank
f Secondary side flow sensor
g Secondary side pump

[2] Notes on hot water supply piping

Be sure to connect the hot water supply piping to the lower part of the storage tank. If you connect it to the unit inlet pipe, an abnormal stop (high pressure or gas cooler outlet temperature) may occur or the outlet hot water temperature may decrease due to the sudden change of the inlet water temperature (5 K/min or more instantaneously or 1 K/min or more consecutively) during operation.

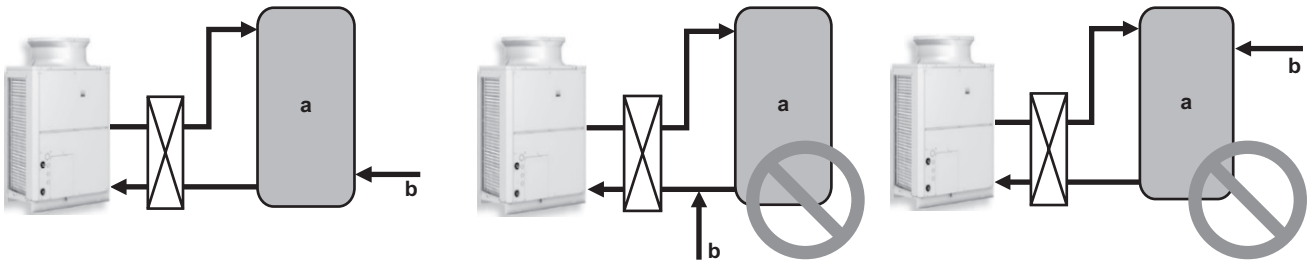

a Storage tank
b Water supply

[3] About anti-freezing operation

This unit performs anti-freezing operation. Furthermore, the control method can be changed according to the system at the site. The following two items can be changed.

(1) Prevent disturbance of thermal stratification in the tank

To prevent the disturbance of the thermal stratification in the tank while the indoor temperature is sufficiently high, set the item code 1514 to "1" so that the judgment criterion for starting the anti-freezing operation of the secondary side circuit matches with the secondary side circuit water temperature criterion.

Setting procedure and operation overview

Setting procedure		Operation
Item code 1514	0 (Initial setting)	Performs anti-freezing operation in the secondary side circuit when the water temperature in the unit side circuit becomes the standard value or below.
	1	Performs anti-freezing operation in the secondary side circuit when the water temperature in the secondary side circuit becomes the standard value or below.

(2) Purpose and application: Prevent piping freezing when the secondary side control is used

If the compressor is not run during the anti-freezing operation in the secondary side control system, there is a risk of the piping of the primary side freezing, so set SW2-5 to "ON" so that the compressor runs during the anti-freezing operation.

Setting procedure and operation overview

Setting procedure		Operation
SW2-5	OFF (Initial setting)	The compressor does not operate when the anti-freezing operation is performed.
	ON	The compressor operates when the anti-freezing operation is performed.

[4] When connecting multiple units

To connect multiple units, configure one secondary side circuit system for each unit as shown in the figure below. (Install a heat exchanger, flow sensor, and thermistor for each unit.)

- The system shown on the right cannot be configured when Secondary circuit kit Q-1SCK is used. When not using Secondary circuit kit Q-1SCK, the system shown on the right is possible.

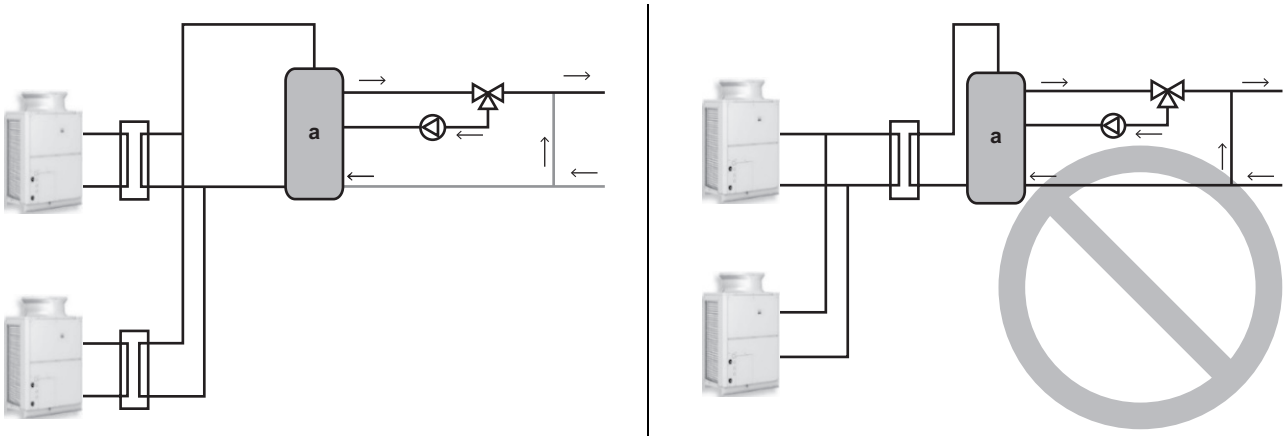

a Storage tank

4-11-3.Optional parts

The flow sensor and thermistor in the system are sold separately.

For the pipe connection method, refer to the manuals of the optional parts (Q-1SCK).

Secondary circuit kit Q-1SCK

The size and length noted are approximate.

Parts	Shape	Specification
Thermistor	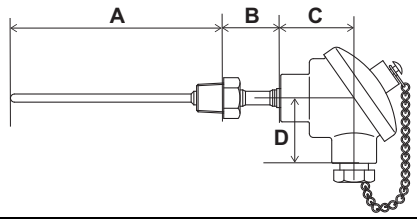	A: 157 mm B: 42 mm C: 54 mm D: 48 mm
Flow sensor	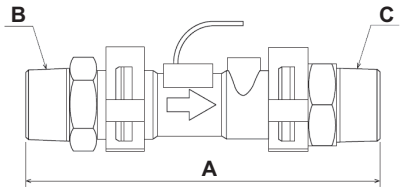	A: 129 mm B: R3/4 C: R3/4 Wiring length: 1.9 m

4-11-4.Setting method for secondary side control

After configuring the secondary side control system, perform the following operation to perform the secondary side control operation.

1) Set the digital setting item "121" to 1. Refer to the following page(s) for detail."Set the preset values with the switches on the circuit board." (p. 44)

2) Perform a water flow rate adjustment operation. Refer to the following page(s) for detail."Water flow rate adjustment operation (when the secondary side control is enabled)" (p. 53)

5. System Configurations

5-1. Test run procedural flow

(1) System startup *1

Configure the settings needed for the local system.

Refer to the specified pages. "Different types of switches on the PCB" (p. 37)

(2) Air bleeding operation

Operate the unit's pump to perform the air bleeding operation.

Refer to the specified pages. "Air bleeding operation and flow rate adjustment operation during test run" (p. 49)

(3) Water flow rate adjustment operation

Adjust the unit's pump and flow rate adjustment valve.

Refer to the specified pages. "Water flow rate adjustment operation (when the secondary side control is disabled)" (p. 51)

- If multiple units are connected to the same water circuit, perform the water flow rate adjustment operation for each unit simultaneously.

*1: **Request at the Time of a Test Run**

Set the slide switch SWS2 on the board inside the control box to the "lower side" during the test run.

By default, it is set to the "upper side" for forced stop of the pump and compressor to prevent the pump being damaged by the anti-freezing process in no water passing status or valve closed status before the test run.

5-2. Schematic Diagrams of Individual and Multiple Systems

5-2-1. Individual system

Each unit is operated individually by connecting a dry contact switch/relay to each unit.



a Unit (MAIN circuit)
b PCB
c External temperature sensor
d Field-supplied dry contact switch/relay or remote controller (PAR-W31MAA) or centralized controller (AE-200)

Refer to the following page(s) for detail."Switch Types and the Factory Settings" (p. 36)"System configuration procedures: Individual system" (p. 43)

5-2-2. Multiple system

A group of unit that consists of one main unit and up to 15 sub units is operated collectively by connecting an external water temperature sensor and a dry contact switch/relay to the main unit.

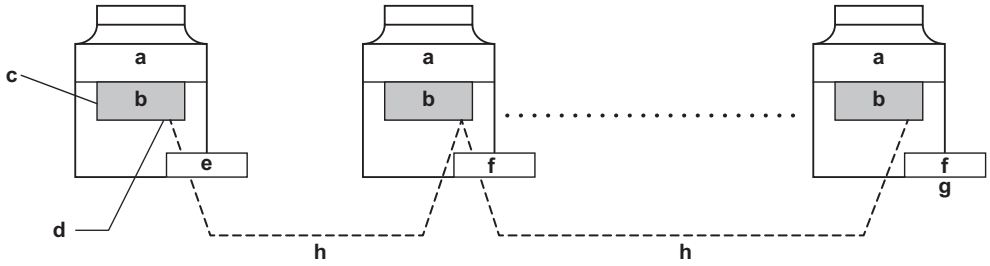

a Unit (MAIN circuit)
b PCB
c External temperature sensor
d Field-supplied dry contact switch/relay or remote controller (PAR-W31MAA) or centralized controller (AE-200)
e MAIN unit
f SUB unit
g "n"th unit
h Inter-unit wiring (M-NET line)

Refer to the following page(s) for detail."Switch Types and the Factory Settings" (p. 36)"System configuration procedures: Multiple system" (p. 45)

5-3. Switch Types and the Factory Settings

5-3-1. Switch names and functions

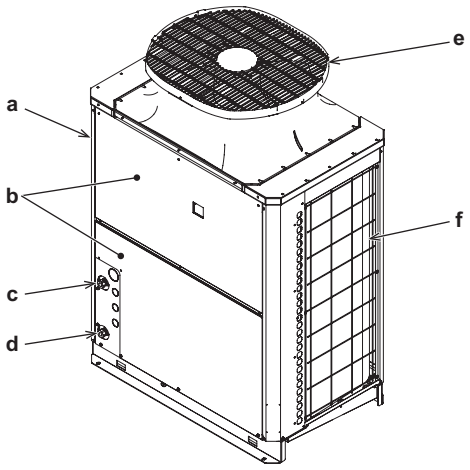

a Control box
b Service panel
c Water outlet
d Water inlet
e Discharge air outlet
f Intake air inlet

There are four main ways to set the settings as follows:

1) Dip switches (SW1 - SW3)
2) Dip switches used in combination with the push switches
3) Rotary switches
4) Slide switches

See below for how these switches are used to set certain items.

5-3-2. Different types of switches on the PCB

Entire view of a PCB

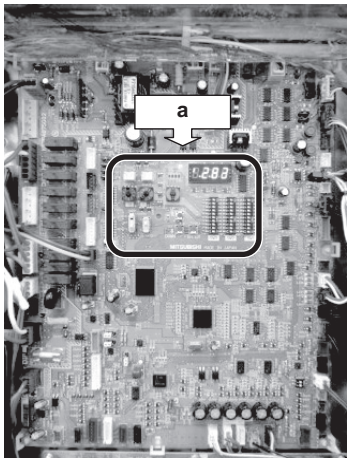

Enlarged view of the switches

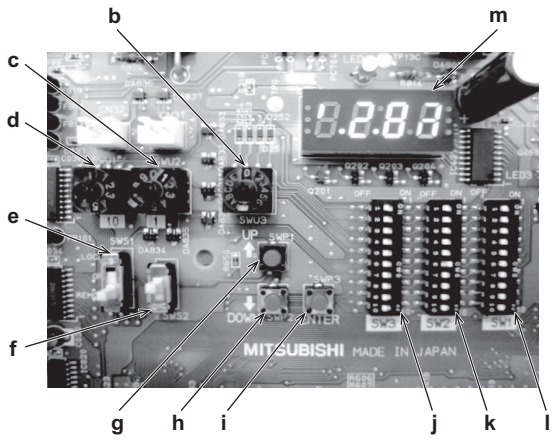

a Switches
b Rotary switch (SWU3) (0-F)
c Rotary switch (SWU2) (0-9)
d Rotary switch (SWU1) (0-9)
e Slide switch (SWS1) (LOCAL, OFF, and REMOTE from the top)
f Slide switch (SWS2) (A and B from the top) *1*2
g Push switch (SWP1) "UP"
h Push switch (SWP2) "DOWN"
i Push switch (SWP3) "ENTER"
j Dip switch (SW3)
k Dip switch (SW2)
l Dip switch (SW1)
m LED display

Set the slide switch SWS2 on the board inside the control box to the **lower side** during the trial run.

By default, it is set to the upper side for forced stop of the pump and compressor to prevent the pump being damaged by the anti-freezing process in no water passing status or valve closed status before the test run.

Upper side: A (under preparation)
Lower side: B (auto)
Always set to the lower side.

*1: **Setting to the upper side forcefully stops the pump and compressor thus the unit does not operate.**
*2: **When SWS2 is set to the upper side, the display shows “P.OFF” and the setting cannot be made. When “P.OFF” appears, set SWS2 to the lower side.**

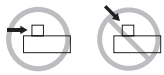

Slide the dip switches; do not push down the switches.

5-3-3. Factory Switch Settings (Dip switch settings table)

SW		Function	Usage	Factory setting MAIN circuit	OFF setting	ON setting	Setting timing
SW 1	1	Model setting		Depends on the unit	Leave the setting as it is.		At a reset
	2						
	3						
	4						
	5						
	6	Test run setting (page 51)		OFF	-	Operation during test run	Any time
	7	Not used		OFF	Leave the setting as it is.		At a reset
	8	Test run setting (page 49)		OFF	-	Operation during test run	Any time
	9	Not used		OFF	Leave the setting as it is.		
	10	Model setting		ON	Leave the setting as it is.		At a reset
SW 2	1	Model setting		OFF	Leave the setting as it is.		At a reset
	2	Model setting		OFF	Leave the setting as it is.		At a reset
	3	Model setting		OFF	Leave the setting as it is.		At a reset
	4	Model setting		OFF	Leave the setting as it is.		At a reset
	5	Freeze-up protection method switching		OFF	Pump operation + heater energization	Compressor operation + heater energization	At a reset
	6	Power supply option to the communication circuit	Switches between supplying or not supplying power to the communication circuit.	ON	Does not supply power to the communication circuit.	Supplies power to the communication circuit.	Any time
	7	Model setting		OFF	Leave the setting as it is.		At a reset
	8	Model setting		OFF	Leave the setting as it is.		At a reset
	9	(1) Individual/Multiple system (2) AE connection	(1) Selects between individual and Multiple system (2) Selects AE connection or not	OFF	Individual system	Multiple system or during AE connection	At a reset
	10	Display mode switch 7	This switch is used in combination with dip switches SW3-5 through 3-10 and push switches SWP 1, 2, and 3 to configure or view the settings when performing a test run or changing the system configuration.	OFF	Changes the 7-segment LED display mode.		Any time
SW 3	1	Remote reset	Enables or disables the error to be reset from a remote location.	ON	Disables the error to be reset from a remote location.	Enables the error to be reset from a remote location.	At a reset
	2	Auto restart after power failure	Enables or disables the automatic restoration of operation after power failure (in the same mode as the unit was in before a power failure).	ON	An alarm will be issued when power is restored after a power outage. The alarm will be reset when the power is turned off and then turned back on.	Automatically restores operation after power failure.	Any time
	3	Test run setting (page 49)		OFF	-	Operating during test run	Any time
	4	Function switching (Do not change this setting.)		OFF	Leave the setting as it is.		At a reset
	5	Display mode switch 1	These switches are used in combination with dip switches SW2-10 and push switches SWP 1, 2, and 3 to configure or view the settings when performing a test run or changing the system configuration.	OFF	Changes the 7-segment LED display mode.		Any time
	6	Display mode switch 2		OFF	Changes the 7-segment LED display mode.		Any time
	7	Display mode switch 3		OFF	Changes the 7-segment LED display mode.		Any time
	8	Display mode switch 4		OFF	Changes the 7-segment LED display mode.		Any time
	9	Display mode switch 5		OFF	Changes the 7-segment LED display mode.		Any time
	10	Display mode switch 6		OFF	Changes the 7-segment LED display mode.		Any time

"-" in the table indicates that the function in the corresponding row will be disabled regardless of the actual switch setting.

The factory setting for these items is OFF.

Refer to the specified pages. "Resetting the system" (p. 48)

- If an error is occurring with the compressor when the dip switch SW2-5 is set to ON, the circulating pump or the compressor will not operate while the unit is operating in the freeze-up protection mode. Only the freeze-up protection heater will turn on.

5-4. Configuring the Settings

The settings must be set only by a qualified personnel.

5-4-1. Table of settings items

Set the dip switches SW2 and SW3 as shown in the table below to set the value for the items in the "Setting item" column.

Dip switch settings	Setting item	Item code	Unit	Lower limit	Upper limit	Initial value	Setting value					Setting timing
							Three-sensor method Six-sensor method			Local control method		
							Main sensor	Sub sensor *3	Sub unit	Main unit	Sub unit	
SW2-10: OFF SW3-5, 6, 7: OFF SW3-8, 9, 10: ON	Remote controller power supply setting	105	-	1	8	2	1 *4	-	-	-	-	At a reset
	Number of connected units to M-NET	106	-	0	16	1		-	-		-	At a reset
	AE-200 connection (0: Not connected, 2: Connected)	107	-	0	2	0				-	-	At a reset
	Function 1 (Sub sensor: 2, Main sensor: 1, Sub unit: 0) *1	110	-	0	2	0	1	2	0	1	0	At a reset
	M-NET address of sub sensor (six-sensor method)	112	-	1	51	51	*3	-	-	-	-	At a reset
	Secondary control availability (0: Not available 1: Available)	121	-	0	1	0						At a reset
SW2-10: OFF SW3-5, 6, 7, 8, 10: OFF SW3-9: ON	Model display	0	-	-	-	-	-	-	-	-	-	-
	Current time	1	Hour and minutes	0:00	23:59	-	*5	*5	*5			Any time
	Current inlet water temperature (display function only)	c01	ºC	-	-	-	-	-	-	-	-	-
	Current outlet water temperature (display function only)	c02	ºC	-	-	-	-	-	-	-	-	-
	Outdoor temperature (display function only)	c03	ºC	-	-	-	-	-	-	-	-	-
	Storage tank water temperature (display function only)	c04	ºC	-	-	-	-	-	-	-	-	-
	Demand control - maximum capacity setting	2	%	0	100	100						Operation SW is turned ON
	Outlet hot water temperature (boiling temperature)	9	ºC	40	Secondary control disabled: 90.0 Secondary control enabled: 80.0	65	*5	*5	*5			Any time
	High- and low-pressure display interval of times	1051	Seconds	0	100	3						Operation SW is turned ON
	Low noise operation - maximum capacity	1054	%	0	100	70						Operation SW is turned ON
SW2-10: OFF SW3-5, 6, 7, 9, 10: OFF SW3-8: ON	Thermo-ON prohibition time Sjs1	1025	Seconds	0	480	60						Any time
	Sensor method setting (0: Local control, 1: Three-sensor, 2: Six-sensor)	1214	-	0	2	0	3-sensor: 1 6-sensor: 2	3-sensor: 1 6-sensor: 2	3-sensor: 1 6-sensor: 2	0	0	At a reset
	Mode 1 Thermo-ON thermistor selection	1500	-	1	Six-sensor system: 6 Other system: 3	3		-	-	-	-	Any time
	Mode 1 Thermo-OFF thermistor selection	1501	-	1	Six-sensor system: 6 Other system: 3	3		-	-	-	-	Any time
	Mode 2 Thermo-ON thermistor selection	1502	-	1	Six-sensor system: 6 Other system: 3	1		-	-	-	-	Any time
	Mode 2 Thermo-OFF thermistor selection	1503	-	1	Six-sensor system: 6 Other system: 3	2		-	-	-	-	Any time
	Mode 3 Thermo-ON thermistor selection	1504	-	1	Six-sensor system: 6 Other system: 3	1		-	-	-	-	Any time
	Mode 3 Thermo-OFF thermistor selection	1505	-	1	Six-sensor system: 6 Other system: 3	3		-	-	-	-	Any time
	Number of water control modes *2	1507	-	1	3	1		-	-	-	-	Any time

Dip switch settings	Setting item	Item code	Unit	Lower limit	Upper limit	Initial value	Setting value					Setting timing
							Three-sensor method Six-sensor method			Local control method		
							Main sensor	Sub sensor *3	Sub unit	Main unit	Sub unit	
SW2-10: OFF SW3-5, 6, 7, 9, 10: OFF SW3-8: ON	Mode 1 Thermo differential value	1508	ºC	0	30	10	*5	-	-	-	-	Any time
	Mode 2 Thermo differential value	1509	ºC	0	30	10	*5	-	-	-	-	Any time
	Mode 3 Thermo differential value	1510	ºC	0	30	10	*5	-	-	-	-	Any time
	Minimum analog output for secondary-side control	1515	-	0	4	0	*6	*6	*6	*6	*6	Any time
	Anti-freezing setting (0: Outdoor, 1: Indoor)	1514	-	0	1	0	*6	*6	*6	*6	*6	At a reset
	Analog input power supply changeover for secondary-side control (Input power-supply voltage: 10 V = 0; 12 V = 1)	1517	-	0	1	0	*6	*6	*6	*6	*6	Any time
	Detection time factor for water temperature drop during secondary-side control *7	1518	minutes	0	20	0	*6	*6	*6	*6	*6	Any time

-: No settings required

*1: Set to "1" when individual system and connected to AE-200.
*2: Set to "3" when using all modes (Mode 1,2, and 3).
Set to "2" when using mode 1 and mode 2.
Set to "1" when using mode 1.
*3: Only Six-sensor method
*4: Required only when AE-200 is connected.
*5: It can also be set with the PAR-W31MAA or AE-200.
*6: When secondary control is enabled.
*7: Change the value of 1518 to the values listed in the table below when the pipe diameter is larger than 25A.

Pipe diameter/piping length combinations		1518 value
Pipe diameter	Piping length (m)	
25A	0-10	0
	10-20	0
	20-30	0
	30-40	1
	40-50	3
	50-60	5
32A	0-10	0
	10-20	0
	20-30	3
	30-40	7
	40-50	11
	50-60	15

5-4-2. Making the settings

Use the LED display and the three push switches (SWP1 (↑), SWP2 (↓), and SWP3 (Enter)) to change the current settings on the circuit board and to monitor various monitored values.

[1] Setting procedures

Take the following steps to set the push switches SWP1 through SWP3. These switches must be set after the dip switches SW2 and SW3 have been set.

1.

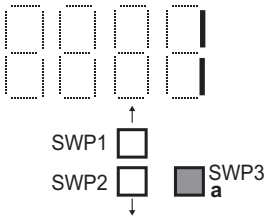

Normally an item code appears on the display.
(The figure at left shows the case where item code 1 is displayed.) Press SWP3 (Enter) to advance the item code.
↓
Press SWP3 (Enter) until the item code appears that corresponds to the item to change or monitor its value.

2.

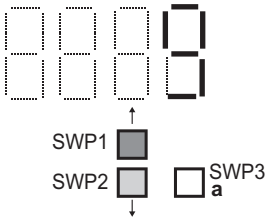

The left figure shows a display example (Code 9 Outlet hot water temperature setting).
↓
Press either SWP1 (↑) or SWP2 (↓) to display the value that corresponds to the selected item.

3.

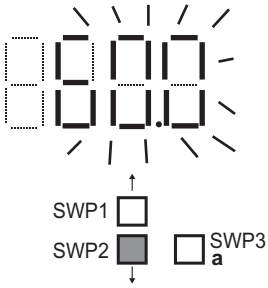

The current setting value will blink.
↓
The left figure shows that the current setting value is "60.0."
To decrease this value to 58.0, for example, press SWP2 (↓).
Press SWP1 (↑) to increase the value.

4.

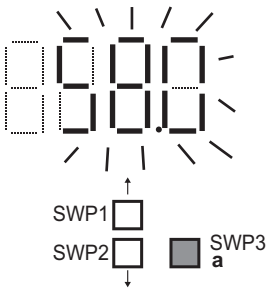

To change the settings
When the desired value is displayed (58.0 in the example at left), press SWP3 (Enter).
↓
The displayed value will stop blinking and stay lit.
A lit LED indicates that the new setting has been saved.

- Pressing SWP1 (↑) or SWP2 (↓) will change the blinking setting value, but the change will not be saved until SWP3 (Enter) is pressed.
  If SWP3 is not pressed within one minute, the change will not be saved and the display will return to the item code display mode.
  Press and hold SWP1 (↑) or SWP2 (↓) for one second or longer to fast forward through the numbers.

To view the monitored data
Press SWP3 (Enter) while the LED display is blinking (see step 3 above) to stop the blinking.

- The values of the items that can only be monitored will not change when SWP1 (↑) or SWP2 (↓) is pressed.

The display will stop blinking and stay lit after a minute, and the display will automatically return to the item code display regardless of the type of values displayed.
To change the values of other items, repeat the steps from step 2 above.

a Enter

Start the setting process

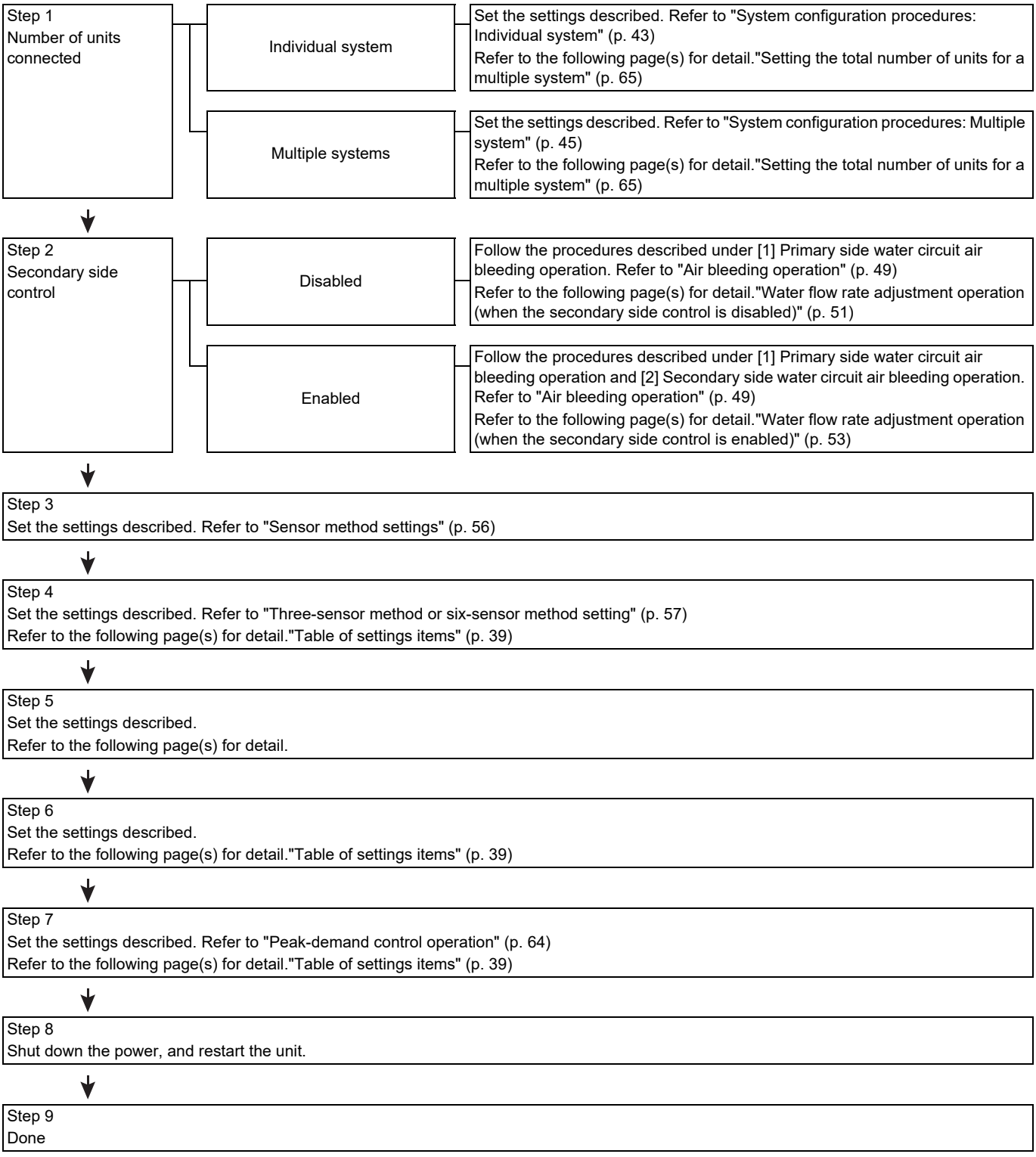

5-4-3. System configuration procedures: Individual system

(1) Set the dip switches on the MAIN circuit board.

Set the dip switches (labeled A in the figure at right) that correspond to the local system.

Refer to the specified pages. "Factory Switch Settings (Dip switch settings table)" (p. 38)

- When AE-200 is connected, set the dip switch 2-9 to ON.

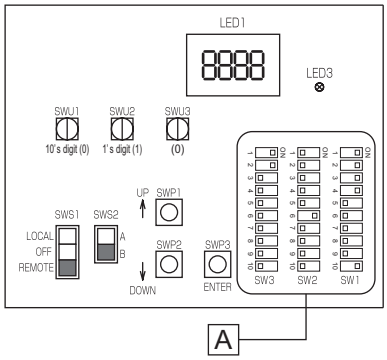

(2) Switch on the power to the unit.

Check for loose or incorrect wiring, and then switch on the power to the unit.

When the power is switched on, the following codes will appear on the LED:

- [EEEE] will appear on LED1 in the circuit board (labeled A in the figure at right).

  [--ng] is displayed before the water flow rate adjustment operation is performed. Cancel the [--ng] display by using one of the following methods.
  - Press SWP3.
  - Press SWP1 or SWP2.

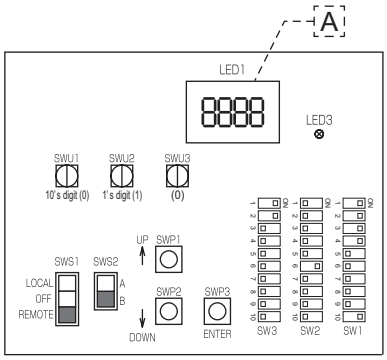

en

(3) Set the preset values with the switches on the circuit board.

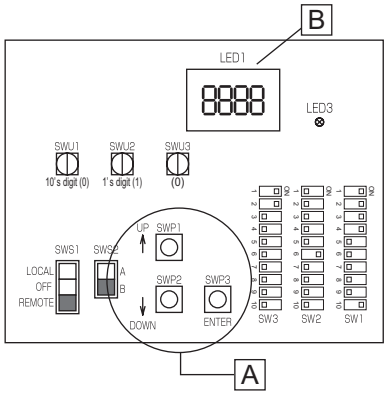

1) Set the dip switches SW2 and SW3. (Set the dip switches 3-8, 3-9, and 3-10 to ON.) Refer to the specified pages. "Setting the total number of units for a multiple system" (p. 65)
- ♦[EEEE] will disappear, and an item code ([101]) will appear on LED1 (labeled B in the figure at right).

2) Use SWP3 to toggle through the item codes and select an item code to change its current value. (The item codes will appear in the following order: [101]→[104]→[105]→[106]→ [107]....)

3) Use SWP1 to increase the value and SWP2 to decrease the value.

4) Press SWP3 to save the changed value.

5) Set the dip switches 3-8, 3-9, and 3-10 to OFF.

6) When connecting AE-200, perform the procedures described in 4. Refer to the following page(s) for detail."Perform an initial setup on the unit" (p. 47)

Following the steps above, set the value for the following items as necessary.

[101]	Not used
[104]	Not used
[105]	Remote controller power supply setting (When AE-200 is not connected to QAHV, the values set by rotary switches SWU1 and SWU2 are set as the preset values. When AE-200 is connected to QAHV, set the preset values referring to the notes below.)
[106]	Number of connected units to M-NET (Initial value: 1) (Leave it as it is.)
[107]	AE-200 connection (0: Not connected, 2: Connected) (Initial value: 0) *1
[108]	Not used
[109]	Not used
[110]	Function 1 ("1" when connected to AE-200) (Initial value: 0)
[111]	Not used
[112 to 120]	Not used
[121]	Secondary control availability (Initial value: 0)

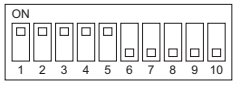

The figure at left shows that the switches 1 through 5 are set to ON and 6 through 10 are set to OFF.

When connecting AE-200 and remote controller (PAR-W31MAA) simultaneously, make the settings above, and then turn off the power, turn it back on, and set "1" for item code [105]. After these settings, perform the procedures described in "Re-initializing the system" (p. 48).

Set SWS1 to OFF from the remote controller or with the local switch.
Settings cannot be changed unless the ON/OFF switch is set to OFF.

The new setting will not be saved unless a reset is performed.

*1: To disconnect from AE-200, re-set the value of [107] back to 0, reset the power, and reinitialize the system by following the instructions detailed under section "Re-initializing the system" (p. 48).

5-4-4. System configuration procedures: Multiple system

[1] Set the dip switches and rotary switches. (Switches on the main unit *1 AND on all sub units)

(1) System configuration diagram

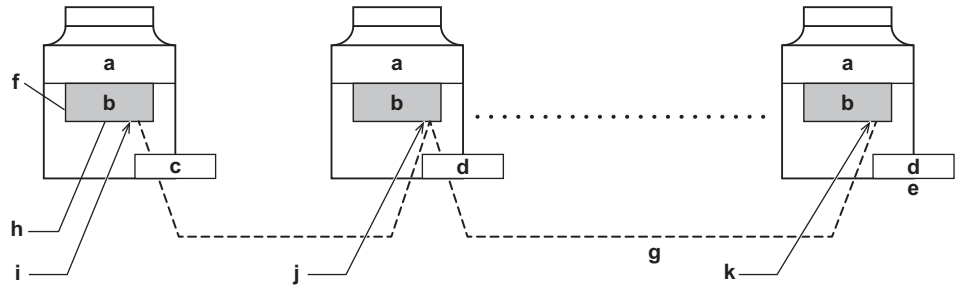

*1:The main unit is the unit to which an external water temperature sensor is connected.

a Unit (MAIN circuit)
b PCB
c Main unit
d Sub unit
e "n"th unit
f External water temperature sensor
g Inter-unit wiring (M-NET line)
h Field-supplied dry contact switch/relay or remote controller (PAR-W31MAA) or centralized controller (AE-200)
i SW2-9: ON, Address: 1
j SW2-6: OFF, SW2-9: ON, Address: 2
k SW2-6: OFF, SW2-9: ON, Address: 1 + n

(2) Setting the switches on the main unit

Set the dip switch SW2-9 to ON. (multiple unit control) (labeled A in the figure at right)
Refer to the specified pages. "Factory Switch Settings (Dip switch settings table)" (p. 38)
Make sure the address of the main unit is set to "1" (labeled B in the figure at right).

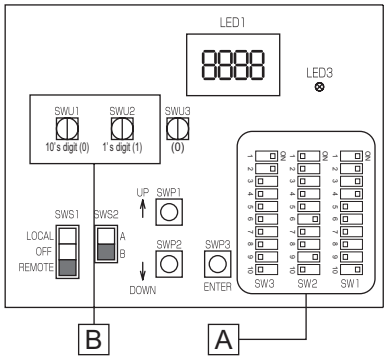

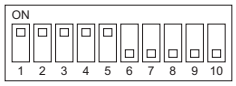

The figure at left shows that the switches 1 through 5 are set to ON and 6 through 10 are set to OFF.

(3) Setting the switches on all sub units

1) Set the dip switch SW2-9 to ON. (multiple unit control) (labeled A in the figure at right)
2) Set the addresses with the rotary switches. (labeled B in the figure at right). Set the 10's digit with SWU1, and set the 1's digit with SWU2. Assign sequential addresses on all sub units starting with 2.
3) Set the dip switch SW2-6 to OFF. (power supply to communication circuit)

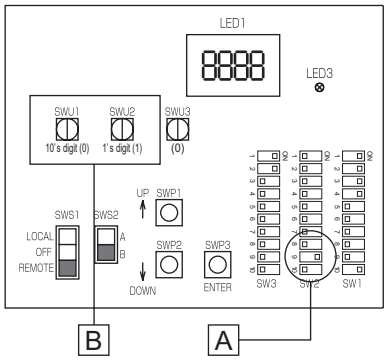

(4) Switch on the power to the unit.

Check for loose or incorrect wiring, and then switch on the power to all units.
When the power is switched on, the following codes will appear on the LED:

- [EEEE] will appear on LED1 in the circuit board.

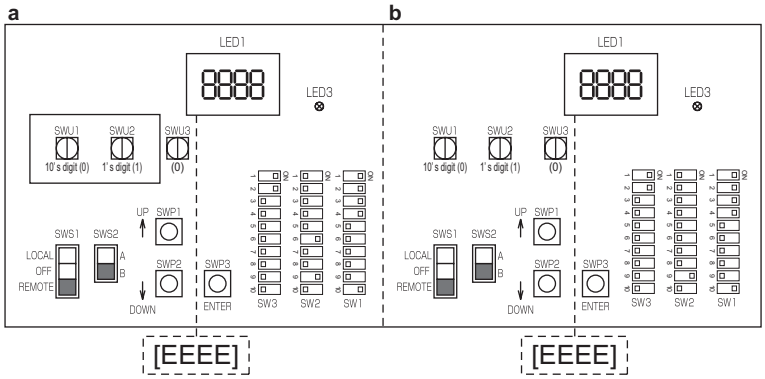

a Main unit
b Sub unit

(5) Set the preset values with the switches on the circuit board.

1) Set the dip switches SW2 and SW3 (Set the dip switches 3-8, 3-9, and 3-10 to ON.) Refer to the following page(s) for detail."Setting the total number of units for a multiple system" (p. 65)
2) Press either one of the push switches SWP1, 2, or 3 (labeled A in the figure at right) on the circuit board.
- [EEEE] will disappear, and an item code ([101]) will appear on LED1 (labeled B in the figure at right).

3) Use SWP3 to toggle through the item codes, and select an item code to change its current value. (The item codes will appear in the following order: [101]→[104]→[105]→[106]→[107]....)
4) Use SWP1 to increase the value and SWP2 to decrease the value.
5) Press SWP3 to save the changed value.
6) Set the dip switches 3-8, 3-9, and 3-10, to OFF.

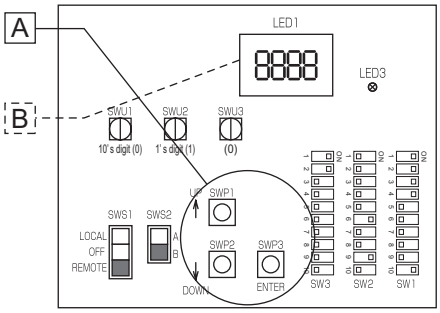

Following the steps above, set the value for the following items with the switches on the circuit as necessary. Item [106] must be set when multiple units are connected to a system.

[101]	Not used
[104]	Not used
[105]	Remote controller power supply setting (When AE-200 is not connected to QAHV, the values set by rotary switches SWU1 and SWU2 are set as the preset values. When AE-200 is connected to QAHV, set the preset values. Refer to the specified pages. "Slide switch (SWS1) settings" (p. 48))
[106]	Number of connected units to M-NET (Initial value: 1)
[107]	AE-200 connection (0: Not connected, 2: Connected) (Initial value: 0) *1
[108]	Not used
[109]	Not used
[110]	Function 1 (Initial value: 0) The sub sensor and the sub unit need to be set as follows. (Sub sensor: 2, Sub unit: 0)
[111]	Not used
[112]	M-NET address of sub sensor. (Six-sensor method)
[113 to 120]	Not used
[121]	Secondary control availability (Initial value: 0)

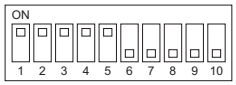

The figure at left shows that the switches 1 through 5 are set to ON and 6 through 10 are set to OFF.

For details of the setting, refer to the following page(s) for detail. "Three-sensor method or six-sensor method setting" (p. 57)
The new setting will not be saved unless a reset is performed.

*1: To disconnect from AE-200, re-set the value of [107] back to 0, reset the power, and reinitialize the system. Refer to the following page(s) for detail. "Re-initializing the system" (p. 48).

(6) Perform an initial setup on the unit

1) Set the sub unit rotary switch SWU3 on the unit (labeled A in the figure at right) to "F."
[EEEE] will appear in LED1 (labeled B in the figure at right). *1

2) Press and hold the sub unit push switch (SWP3) (labeled C in the figure at right) for one second or longer.
- While the system is starting up [9999] will appear on LED1 (labeled B in the figure at right).

3) Set the main unit rotary switch SWU3 on the unit (labeled A in the figure at right) to "F."
[EEEE] will appear in LED1 (labeled B in the figure at right). *1

4) Press and hold the main unit push switch (SWP3) (labeled C in the figure at right) for one second or longer.
- While the system is starting up [9999] will appear on LED1 (labeled B in the figure at right).

5) When start-up is complete, a control property [0001] will appear.
- Then, five seconds later, [FFFF] will appear. *2

6) Set the rotary switch SWU3 (labeled A in the figure at right) back to "0."
The start-up process is complete, and the settings for such items as clock, peak-demand control, schedule, and thermistor settings can now be made.

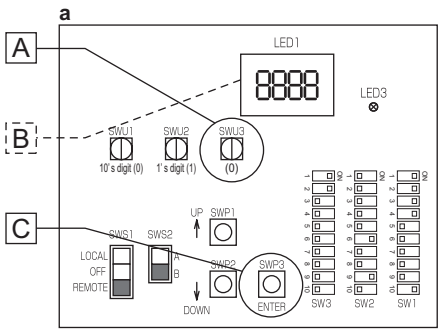

a Main unit

*1: If the start-up process has already been completed, [FFFF] (instead of [EEEE]) will appear when the rotary switch SWU3 is set to "F."

*2: [--ng] is displayed before the water flow rate adjustment operation is performed.
For how to cancel [--ng], refer to the specified pages. "System configuration procedures: Individual system" (p. 43)

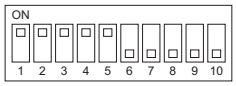

The figure at left shows that the switches 1 through 5 are set to ON and 6 through 10 are set to OFF.

When connecting AE-200 and remote controller (PAR-W31MAA) simultaneously, make the settings above, and then turn off the power, turn it back on, and set "1" for item code [105] for the unit to which a remote controller is connected. After these settings, perform the procedures described in "Re-initializing the system" (p. 48).

5-4-5. Slide switch (SWS1) settings

(1) Individual system

SWS1 Setting	Unit Operation
LOCAL	Follows the input signal of the MAIN circuit
OFF	Ignores the signal input
REMOTE	Follows the input signal fed through a dry contact interface

(2) Multiple system (SWS1 in the SUB circuit on both the main and sub units will be ineffective.)

SWS1 Setting		Unit Operation	
Main unit MAIN circuit	Sub unit MAIN circuit	Main unit	Sub unit
LOCAL	LOCAL	Follows the input signal of the Main unit	Follows the input signal of the Sub unit
	OFF		Ignores the signal input
	REMOTE		Follows the input signal of the Sub unit
OFF	LOCAL	Ignores the signal input	Ignores the signal input
	OFF		
	REMOTE		
REMOTE	LOCAL	Follows the input signal fed through a dry contact interface	Follows the input signal of the Main unit
	OFF		Ignores the signal input
	REMOTE		Follows the input signal of the Main unit

5-4-6. Re-initializing the system

When the settings for the items below have been changed, the system will require re-initialization.

- Dip switch SW2-9 (multiple unit control)
- External signal input setting: Item codes [105], [106], [107], [110], [112], [121], and [1214]
- Rotary switches (SWU1 and SWU2) (unit address)

Take the following steps to re-initialize the system:

(1) Set the rotary switch SWU3 to "F."

[FFFF] will appear in the LED1.

(2) Press and hold the push switch SWP3 for one second or longer.

- While the system is starting up [9999] will appear on LED1.
- When start-up is complete, a control property [0001] will appear.
- Then, five seconds later, [FFFF] will appear. *1

*1: If [EEEE] appears, perform the procedures in (2) again.
[--ng] is displayed before the water flow rate adjustment operation is performed.

(3) Set the rotary switch SWU3 back to "0."

5-4-7. Resetting the system

Take the following steps to reset the system. An error can also be reset by taking the steps below.
When an error on the MAIN unit is reset, all sub units will stop.

(1) Set the rotary switch SWU3 to "F."

[FFFF] will appear in the LED1.

(2) Press and hold the push switch SWP3 for one second or longer.

- While the system is starting up [9999] will appear on LED1.
- When start-up is complete, a control property [0001] will appear.
- Then, five seconds later, [FFFF] will appear.

(3) Set the rotary switch SWU3 back to "0."

5-5. Air bleeding operation and flow rate adjustment operation during test run

5-5-1. Air bleeding operation

Check there is no water leakage during operation.

For each circuit, perform at least three sets of at least 5 minutes in duration. During the air bleeding operation, use the method below (*1) to display the water flow rate during operation and check it is stable (no air entrainment).

[1] Primary side water circuit air bleeding operation

Step	Contents	Operation and check points	Supplemental explanation
a	Water level check	Check the water level is the full level.	-
b	Power operation	Turn the power ON.	-
c	PCB DIP switch setting	Change the setting of SW1-8 from OFF to ON. SW1-8: ON SW1-9: OFF SW3-3: OFF	• Make sure SWS2 is set to the lower side. Refer to the following page(s) for detail."Different types of switches on the PCB" (p. 37)
d	Operation procedure	Change the setting of PCB slide SWS1 from REMOTE to LOCAL. • When the pump sound has become quiet, end operation.	The compressor does not operate. • The pump and water flow control valve (MVW1) are automatically set to OPEN (starting water flow).
e	Stop operation 1	Change the setting of PCB DIP SW1-8 from ON to OFF.	• The pump and water flow control valve (MVW1) are automatically set to CLOSED (ending water flow).
f	Stop operation 2	Change the setting of PCB slide SWS1 from LOCAL to REMOTE.	-

[2] Secondary side water circuit air bleeding operation

Step	Contents	Operation and check points	Supplemental explanation
a	Water level check	Check the water level is the full level.	-
b	Power operation	Turn the power ON.	-
c	Operation procedure 1	Check that the secondary side control is enabled.	Refer to the following page(s) for detail."Set the preset values with the switches on the circuit board." (p. 44)
d	PCB DIP switch setting	Change the setting of SW3-3 from OFF to ON. SW1-8: OFF SW1-9: OFF SW3-3: ON	• Make sure SWS2 is set to the lower side. Refer to the following page(s) for detail."Different types of switches on the PCB" (p. 37)
e	Operation procedure 2	Change the setting of PCB slide SWS1 from REMOTE to LOCAL. • When the pump sound has become quiet, end operation.	The compressor does not operate. • The pump and water flow control valve (MVW1) are automatically set to OPEN (starting water flow).
f	Stop operation 1	Change the setting of PCB DIP SW3-3 from ON to OFF.	• The pump and water flow control valve (MVW1) are automatically set to CLOSED (ending water flow).
g	Stop operation 2	Change the setting of PCB slide SWS1 from LOCAL to REMOTE.	-

*1: Water flow rate display method

1) Set the PCB DIP switches as shown below.

SW2	SW3					
10	5	6	7	8	9	10
OFF	OFF	OFF	OFF	OFF	ON	ON

2) If the flow rate adjustment operation has never been performed, [--ng] appears on the PCB's digital display after the system startup operation. Press SWP1 (↑) or SWP2 (↓) to delete the [--ng] from the PCB's digital display (changing the display to a value such as 1).

3) Press SWP3 repeatedly to change the code shown in the PCB's display. The code changes with each press. Continue pressing SWP3 until item code 'C25' is displayed in the PCB's digital display.

4) Once 'C25' is displayed, press SWP1 or SWP2 to display and check the current flow rate.
After displaying the flow rate, the display shows the current item code (*2) if SWP1 to SWP3 are not operated for one minute. Display and check the current flow rate by pressing SWP1 or SWP2 again.

*2: If the flow rate adjustment operation has never been performed, [--ng] appears in the PCB's digital display after the system startup operation. Press SWP1 or SWP2 to delete the [--ng] from the PCB's digital display (changing the display to 'C25').

If water shutoff error 2601 occurs during the air bleeding operation, remove the cause of the problem, then change the setting of PCB slide SWS1 from LOCAL to OFF, and back to LOCAL again. The air bleeding operation starts.
(You can clear water shutoff error by turning the power OFF and ON again. The equipment enters standby mode in this case.)
(You can also clear water shutoff errors by changing the setting of PCB DIP SW1-9 from OFF to ON once and set back to OFF. Air-Vent operation is started when DIP SW1-9 is set back to OFF.)

5-5-2. Water flow rate adjustment operation (when the secondary side control is disabled)

Step	Contents	Operation and check points	Supplemental explanation
a	Water level check	Check the water level is the full level.	-
b	Power operation	Turn the power ON.	If this flow rate adjustment operation has never been performed [--ng] is displayed.
c	Operation procedure	Change the setting of PCB slide SWS1 from REMOTE to LOCAL.	• Make sure SWS2 is set to the lower side. Refer to the following page(s) for detail."Different types of switches on the PCB" (p. 37)
d	Operation procedure	Change the setting of SW1-6 from OFF to ON.	• Step c and Step d must be taken in sequence to run the flow-adjustment operation. • The pump operation and flow rate adjustment valve opening are automatically adjusted, and the flow rate is measured in 30-second intervals. • You can check whether this flow rate adjustment operation has ended or is underway using the setting given in **NOTE 1**.
e	Stop operation 1	Change the setting of SW1-6 from ON to OFF.	-
f	Stop operation 2	Change the setting of PCB slide SWS1 from LOCAL to REMOTE.	-

en

Checking the flow rate after the flow rate adjustment operation

The flow rate adjustment operation adjusts the pump output and water flow rate valve opening to determine how to match the flow rate characteristic to the local circuit. **Use the method below (1) to 4)) to check the operation result (characteristic).*1**

If air bleeding was not done fully and the map not created properly, a water shutoff error, high pressure error or other problems will occur when operating the system. Check the points below in this case. If the values are abnormal, redo the air bleeding and flow rate adjustment operations.

1) Set the PCB's DIP switches as shown below.

SW2	SW3					
10	5	6	7	8	9	10
OFF	OFF	OFF	OFF	OFF	ON	ON

2) Press SWP3 repeatedly to change the code shown in the PCB's display. The code changes with each press (*1). Continue pressing SWP3 until 'dxx' is displayed in the PCB's digital display.
('dxx' is a code that stores the flow rate for a given pump output opening and valve opening. See Table 1.)

*1: If the flow rate adjustment operation has never been performed, [--ng] appears after the system startup operation. Perform the flow rate adjustment operation in this case.

3) Press SWP1 or SWP2 to display the operation result (flow rate characteristic) corresponding each flow rate code 'dxx' in Table 1 and write them down.

Table 1

	Close ← Water flow rate adjust valve opening → Open								
Pump output opening/water flow rate adjust valve opening	1600	1400	1200	1000	800	600	400	200	100
Flow rate (pump output opening 27%)	d10	d11	d12	d13	d14	d15	d16	d17	d18
Flow rate (pump output opening 100%)	d19	d20	d21	d22	d23	d24	d25	d26	d27

Check result

	Close ← Water flow rate adjust valve opening → Open								
Pump output opening/water flow rate adjust valve opening	1600	1400	1200	1000	800	600	400	200	100
Flow rate (pump output opening 27%)									
Flow rate (pump output opening 100%)									

4) Check the following.
Check the checkbox.

☐ **When the pump output opening is 27% and 100%, all places with flow rate valve opening 1000 through 100 are 2 L or above? (item codes d13 through d18, d22 through d27)**
If 2 L/min or below, air may not be bled out. Perform an air bleeding operation and water flow rate adjustment operation again.

☐ **When there are multiple units, the values of the same pump output opening and the same valve opening are not greater or less than those for other units by 10% and 2 L/min or more.**
(In multiple-unit system, perform a water flow rate adjustment operation at the same time.)

NOTE 1

- The table below shows the water flow rate adjustment operation status in 4 figures when the PCB DIP switch is set as shown in **NOTE 2**.

Water flow rate adjustment operation status	Display
Not completed	- - n g
Completed	- - - g
In operation	- i n g

NOTE 2

- PCB DIP switch settings

SW2	SW3					
10	5	6	7	8	9	10
ON	OFF	OFF	OFF	ON	ON	OFF

5-5-3. Water flow rate adjustment operation (when the secondary side control is enabled)

Step	Contents	Operation and check points	Supplemental explanation
a	Water level check	Check the water level is the full level.	Water is supplied even when the target water level has been reached.
b	Power operation	Turn the power ON.	If this flow rate adjustment operation has never been performed [--ng] is displayed.
c	Operation procedure 1	Check that the secondary side control is enabled.	Refer to the following page(s) for detail."Set the preset values with the switches on the circuit board." (p. 44)
d	Operation procedure 2	Change the setting of PCB slide SWS1 from REMOTE to LOCAL.	• Make sure SWS2 is set to the lower side. Refer to the following page(s) for detail."Different types of switches on the PCB" (p. 37)
e	Operation procedure 3	Change the setting of SW1-6 from OFF to ON.	• Step d and Step e must be taken in sequence to run the flow-adjustment operation. The pump operation and flow rate adjustment valve opening are automatically adjusted, and the flow rate is measured in 30 second intervals. • You can check whether this flow rate adjustment operation has ended or is underway using the setting given in **NOTE 1**.
f	Stop operation 1	Change the setting of SW1-6 from ON to OFF.	-
g	Stop operation 2	Change the setting of PCB slide SWS1 from LOCAL to REMOTE.	-

en

Checking the flow rate after the flow rate adjustment operation

The flow rate adjustment operation adjusts the pump output and water flow rate valve opening to determine how to match the flow rate characteristic to the local circuit. **Use the method below (1) to 4)) to check the operation result (characteristic).**

If air bleeding was not done fully and the map not created properly, a water shutoff error, high pressure error or other problems will occur when operating the system. Check the points below in this case. If the values are abnormal, redo the air bleeding and flow rate adjustment operations.

1) Set the PCB's DIP switches as shown below.

SW2	SW3					
10	5	6	7	8	9	10
OFF	OFF	OFF	OFF	OFF	ON	ON

2) Press SWP3 repeatedly to change the code shown in the PCB's display. The code changes with each press (*1). Continue pressing SWP3 until 'dxx' is displayed in the PCB's digital display.

('dxx' is a code that stores the flow rate for a given pump output opening and valve opening. See Table 1.)

*1: If the flow rate adjustment operation has never been performed, [--ng] appears after the system startup operation. Perform the flow rate adjustment operation in this case.

3) Press SWP1 or SWP2 to display the operation result (flow rate characteristic) corresponding each flow rate code 'dxx' in Table 1 and write them down.

Table 1
Primary side circuit flow rate map

	Close ← Water flow rate adjust valve opening → Open								
Pump output opening/water flow rate adjust valve opening	1600	1400	1200	1000	800	600	400	200	100
Flow rate (pump output opening 27%)	d10	d11	d12	d13	d14	d15	d16	d17	d18
Flow rate (pump output opening 100%)	d19	d20	d21	d22	d23	d24	d25	d26	d27

Check result

	Close ← Water flow rate adjust valve opening → Open								
Pump output opening/water flow rate adjust valve opening	1600	1400	1200	1000	800	600	400	200	100
Flow rate (pump output opening 27%)									
Flow rate (pump output opening 100%)									

4) Check the following.

Primary side circuit
Check the checkbox.

☐ **When the pump output opening is 27% and 100%, all places with flow rate valve opening 1000 through 100 are 2 L or above? (item codes d13 through d18, d22 through d27)**
If 2 L/min or below, air may not be bled out. Perform an air bleeding operation and water flow rate adjustment operation again.

☐ **When there are multiple units, the values of the same pump output opening and the same valve opening are not greater or less than those for other units by 10% and 2 L/min or more.**
(In multiple-unit system, perform a water flow rate adjustment operation at the same time.)

Table 2
Secondary side circuit flow rate map

Pump output value	0	5	10	15	20	25	30	35	40	45	50
Flow rate	d55	d56	d57	d58	d59	d60	d61	d62	d63	d64	d65
Pump output value	55	60	65	70	75	80	85	90	95	100	
Flow rate	d66	d67	d68	d69	d70	d71	d72	d73	d74	d75	

Check result

Pump output value	0	5	10	15	20	25	30	35	40	45	50
Flow rate											
Pump output value	55	60	65	70	75	80	85	90	95	100	
Flow rate											

Secondary side circuit
Check the checkbox.

☐ **Is the output at 100% (d75) between 20 ℓ/min and 30 ℓ/min?**
If the output is below 20 ℓ/min, water may not flow at a high flow rate during normal operation.
If the output is above 30 ℓ/min, water may not flow at a low flow rate during normal operation.
- Take a measure such as adjusting the frequency using an inverter, etc. so that the output at 100% (d75) becomes between 20 ℓ/min and 30 ℓ/min.

☐ **Does a value from 1 ℓ/min to 4 ℓ/min exist for the flow rate at an arbitrary output except 0%?**
If there was no value from 1 ℓ/min to 4 ℓ/min for the flow rate when any output except 0%, the flow rate may not be able to be controlled at a low flow rate.
- Carry out the air bleeding and flow rate adjustment operations again.
- Take a measure such as adjusting the frequency using an inverter, etc. so that a value from 1 ℓ/min to 4 ℓ/min exists for the flow rate during output.

NOTE 1

- The table below shows the water flow rate adjustment operation status in 4 figures when the PCB DIP switch is set as shown in **NOTE 2**.

Water flow rate adjustment operation status	Display
Not completed	- - n g
Completed	- - - g
In operation	- i n g

NOTE 2

- PCB DIP switch settings

SW2	SW3					
10	5	6	7	8	9	10
ON	OFF	OFF	OFF	ON	ON	OFF

5-6. Water-temperature setting

5-6-1. Sensor method settings

Setting procedures

Step 0

Set the ON/OFF switch (SWS1) to OFF.

Set SWS1 to OFF from the remote controller or with the local switch.
Settings cannot be changed unless the ON/OFF switch is set to OFF.

Step 1

Set the dip switches SW2 and SW3.

Set the dip switches on the circuit board as follows before making the settings for the items described in this section.

SW2	SW3					
10	5	6	7	8	9	10
OFF	OFF	OFF	OFF	ON	OFF	OFF

Step 2

Select the desired item with the push switch SWP3.

The item codes shown in the table below will appear in order every time the push switch SWP3 is pressed.
Use the push switches SWP1 and SWP2 to change the value of the selected item.
The value will keep blinking while it is being changed.

Step 3

Press the push switches SWP1 (↑) or SWP2 (↓) to increase or decrease the value.

	Item code	Increments	Lower limit	Upper limit	Initial value
Sensor method setting	1214	1	0	2	0

0: Local control method
1: Three-sensor method
2: Six-sensor method

- PAR-W31MAA or AE-200 is required when three-sensor or six-sensor method is used.

Step 4

Press the push switch SWP3 to save the change.

Press SWP3 once within one minute of changing the setting with SWP1 or SWP2 to save the setting.
Once the new setting is saved, the display will stop blinking and stay lit. The display will, then, return to the item code display mode.
If SWP3 is not pressed within one minute, the change will not be saved and the display will return to the item code display mode.

- When using multiple units, configure the same settings for each unit.
- When "Local control method" is selected, hot water storage operation ON/OFF control is performed by ON/OFF status of TB6 32-33.

5-6-2. Three-sensor method or six-sensor method setting

Use the separately sold thermistor (TW-TH16E) to control the water temperature in the storage tank.

Setting procedures

Step 0

Set the ON/OFF switch (SWS1) to OFF.

Set SWS1 to OFF from the remote controller or with the local switch.

Settings cannot be changed unless the ON/OFF setting is set to OFF.

Step 1

Set the dip switches SW2 and SW3.

SW2	SW3					
10	5	6	7	8	9	10
OFF	OFF	OFF	OFF	ON	OFF	OFF

Step 2

Select the desired item with the push switch SWP3.

Item codes 1500 through 1510 relate to sensor method setting.

Press the push switch SWP3 to select an item code.

Use the push switches SWP1 and SWP2 to change the value of the selected item.

The value will keep blinking while it is being changed.

Step 3

Press the push switches SWP1 (↑) or SWP2 (↓) to increase or decrease the value.

Settings table

Settable item	Item code	Initial value	Unit	Limits and increments		
				Increments	Lower limit	Upper limit
Mode 1 Thermo-ON thermistor selection	1500	3	-	1	1	3 (6 *1)
Mode 1 Thermo-OFF thermistor selection	1501	3	-	1	1	3 (6 *1)
Mode 2 Thermo-ON thermistor selection	1502	1	-	1	1	3 (6 *1)
Mode 2 Thermo-OFF thermistor selection	1503	2	-	1	1	3 (6 *1)
Mode 3 Thermo-ON thermistor selection	1504	1	-	1	1	3 (6 *1)
Mode 3 Thermo-OFF thermistor selection	1505	3	-	1	1	3 (6 *1)
Number of water control modes	1507	1	-	1	1	3
Mode 1 Thermo differential value	1508	10	ºC	1	0	30
Mode 2 Thermo differential value	1509	10	ºC	1	0	30
Mode 3 Thermo differential value	1510	10	ºC	1	0	30

*1:Only for six-sensor method

Thermistor number 1: TH15, 2: TH16, 3: TH17

*2:Set the item code 1507 to "3" when using all modes (Mode 1, 2, and 3).

Set the item code 1507 to "2" when using mode 1 and mode 2.

Set the item code 1507 to "1" when using mode 1.

Step 4

Press the push switch SWP3 to save the change.

Press SWP3 once within one minute of changing the setting with SWP1 or SWP2 to save the setting.

Once the new setting is saved, the display will stop blinking and stay lit. The display will, then, return to the item code display mode.

If SWP3 is not pressed within one minute, the change will not be saved and the display will return to the item code display mode.

Usage example

Operation example (Three-sensor method - when a remote controller PAR-W31MAA is used)

Operation mode: Mode 1

Mode 1 Thermo-ON thermistor selection (Item code 1500): 3

Mode 1 Thermo-OFF thermistor selection (Item code 1501): 3

When changing the sensor setting to 3 or 6, change the value of Mode 1 accordingly. Otherwise, the inlet water temperature may stay high.

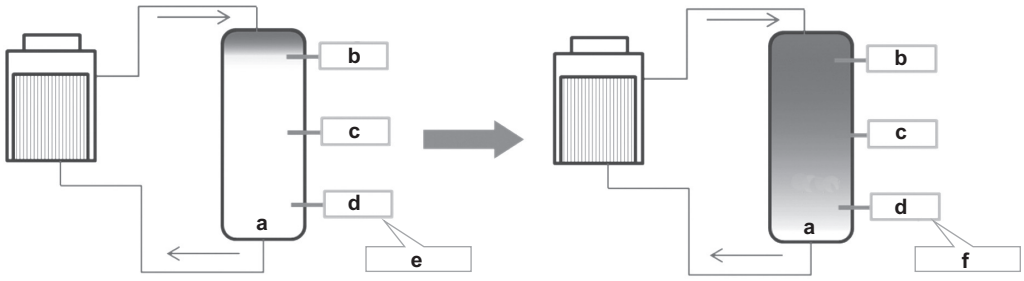

a Tank
b TH15
c TH16
d TH17
e TH17 temperature < (Set water temperature - Mode 1 Thermo differential value [Code: 1508])
Unit operation start
f TH17 temperature > Set water temperature
Unit operation stop

- Use the separately sold TW-TH16E temperature thermistor.
  Two or more units are needed to use the six-sensor method.
- Make sure to set the unit outlet hot water temperature.
- Set the operation mode and water temperature from the remote controller PAR-W31MAA.

Referring to the figure below, configure the settings for each unit according to the system.

Three-sensor method

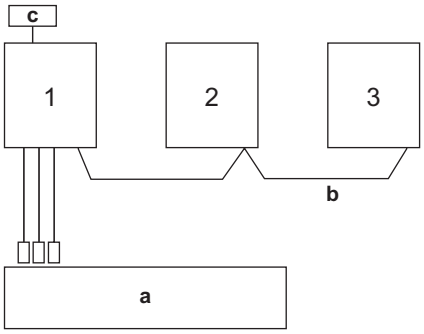

Address	Item code		
	106	110	1214
1	3	1	1
2	3	0	1
3	3	0	1

- SW2-9: ON (When multiple units are connected)

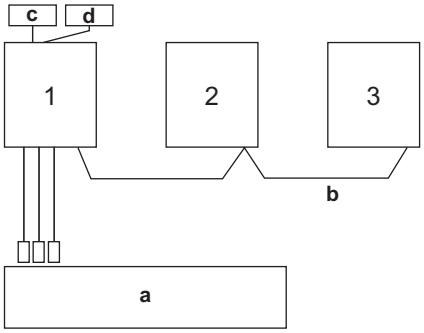

Address	Item code				
	105	106	107	110	1214
1	1	3	2	1	1
2	-	3	2	0	1
3	-	3	2	0	1

- SW2-9: ON (When multiple units are connected)
- When a remote controller is not connected, the setting for item code [105] is not required.

Six-sensor method

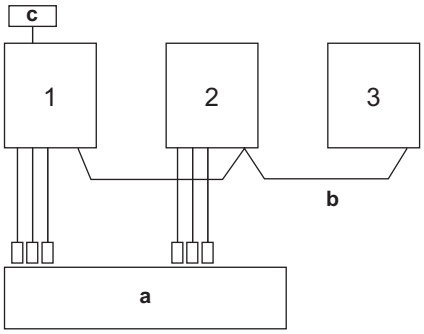

Address	Item code			
	106	110	112	1214
1	3	1	2	2
2	3	2	-	2
3	3	0	-	2

- SW2-9: ON

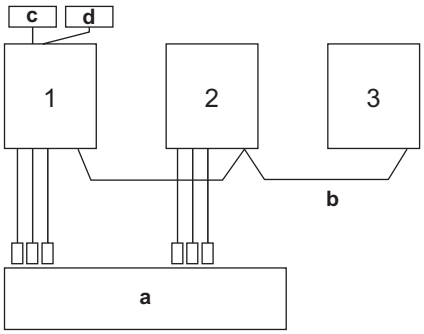

Address	Item code					
	105	106	107	110	112	1214
1	1	3	2	1	2	2
2	-	3	2	2	-	2
3	-	3	2	0	-	2

- SW2-9: ON
- When a remote controller is not connected, the setting for item code [105] is not required.

a Storage tank
b M-NET cable
c PAR-W31MAA
d AE-200

For how to make item code settings, Refer to the following page(s) for detail."Sensor method settings" (p. 56)

5-6-3. Setting the outlet hot water temperature

[1] Selecting the outlet hot water temperature setting method

Select one of the following three outlet hot water temperature setting methods.

Setting procedures

Step 0

Set the ON/OFF switch (SWS1) to OFF.

Set SWS1 to OFF from the remote controller or with the local switch.

Settings cannot be changed unless the ON/OFF setting is set to OFF. *1

Step 1

Set the dip switches SW2 and SW3.

Set the dip switches on the circuit board as follows before making the settings for the items described in this section.

SW2	SW3					
10	5	6	7	8	9	10
OFF	OFF	OFF	OFF	OFF	ON	OFF

Step 2

Select the desired item with the push switch SWP3.

Press the push switch SWP3 to select item code 1073.

Press the push switches SWP1 or SWP2 to change the value of the selected item.

The value will keep blinking while it is being changed.

Step 3

Press the push switches SWP1 (↑) or SWP2 (↓) to increase or decrease the value.

Settings table

Settable item	Item code	Initial value	Unit	Setting			Setting change from an optional remote controller
				Increments	Lower limit	Upper limit	
Setting method selection	1073	0	-	1	0	2	Not possible

0: Outlet Hot Water Temp. input PCB or PAR-W31MAA or AE-200

1: Outlet Hot Water Temp. input IT terminal

2: Outlet Hot Water Temp. input 4-20 mA (Analog input)

Step 4

Press the push switch SWP3 to save the change.

Press SWP3 once within one minute of changing the setting with SWP1 or SWP2 to save the setting.

Once the new setting is saved, the display will stop blinking and stay lit. The display will, then, return to the item code display mode.

If SWP3 is not pressed within one minute, the change will not be saved and the display will return to the item code display mode.

---

*1: Configure the settings for the main unit only when controlling multiple units.

The new setting will not be saved unless a reset is performed.

[2] Outlet hot water temperature setting method from PCB

Setting procedures

Step 0

Set the ON/OFF switch (SWS1) to OFF.

Set SWS1 to OFF from the remote controller or with the local switch.

Settings cannot be changed unless the ON/OFF setting is set to OFF.

Step 1

Set the dip switches SW2 and SW3.

Set the dip switches on the circuit board as follows before making the settings for the items described in this section.

SW2	SW3					
10	5	6	7	8	9	10
OFF	OFF	OFF	OFF	OFF	ON	OFF

Step 2

Select the desired item with the push switch SWP3.

Press the push switch SWP3 to select item code 9.

Press the push switches SWP1 or SWP2 to change the value of the selected item.

The value will keep blinking while it is being changed.

Step 3

Press the push switches SWP1 (↑) or SWP2 (↓) to increase or decrease the value.

Settings table

Settable item	Item code	Initial value	Unit	Setting			Setting change from an optional remote controller
				Increments	Lower limit	Upper limit	
Outlet Hot Water Temp. setting	9	65	ºC	0.5	40	90 (80) *2	Possible

*1:This becomes the secondary side outlet hot water temperature when the secondary side control is enabled.

*2:Secondary control disabled: 90ºC, Secondary control enabled: 80ºC

Step 4

Press the push switch SWP3 to save the change.

Press SWP3 once within one minute of changing the setting with SWP1 or SWP2 to save the setting.

Once the new setting is saved, the display will stop blinking and stay lit. The display will, then, return to the item code display mode.

If SWP3 is not pressed within one minute, the change will not be saved and the display will return to the item code display mode.

---

[3] Settings from PAR-W31MAA

Refer to the specified pages. "Setting the functions" (p. 95)

[4] Settings using Analog input

Remote water temperature setting input signal type

Analog input type can be selected from the following four types:

"0": 4-20 mA
"1": 0-10 V
"2": 1-5 V
"3": 2-10 V

Select item code 1075 to set the type of analog input signal to be used to set the water temperature from a remote location.

Setting procedures

Set the dip switches on the circuit board as follows to change the settings.

Step 1

Set dip switches SW2, SW3, SW421-1, and SW421-2.

	SW421-1	SW421-2
4-20 mA	ON	ON
0-10 V	OFF	OFF
1-5 V	OFF	ON
2-10 V	OFF	OFF

SW2	SW3					
10	5	6	7	8	9	10
OFF	OFF	OFF	OFF	OFF	ON	OFF

Step 2

Select the item to be set with push switch SWP3.

Select the type of analog input signal to be used to set the water temperature from a remote location.

Step 3

Change the values with push switches SWP1 (↑) or SWP2 (↓).

Press push switch SWP3 to select the item code.
Change the values with push switches SWP1 and SWP2.
Until the changed values are saved, the values will blink.

- Configure the settings for the main unit only when controlling multiple units.

Settings table

Settable item	Item code	Initial value	Unit	Setting			Note	Setting change from an optional remote controller
				Increments	Lower limit	Upper limit		
Water temperature setting input signal type	1075	0		1	0	3		Not possible

---

Step 4

Press push switch SWP3 to save the changed value.

Press SWP3 once within one minute of changing the settings to save the change.
When the new setting is saved, the display will stop blinking and stay lit. The display will, then, return to the item code display mode.
If SWP3 is not pressed within one minute, the change will not be saved, and the display will return to the item code display mode.

5-6-4. Setting the water temperature using analog signal input

Select the analog input format

(1) When the water temperature setting input signal type is set to 0 (4-20 mA)

External analog input signal of between 5.9 and 18.3 mA: the preset temperature will be linearly interpolated.

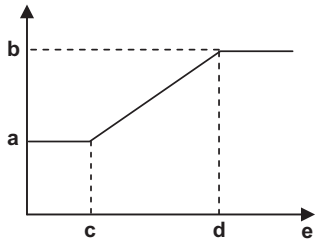

Preset temperature = (B - A) * (Input current - 5.9 mA) / 12.4 mA + A
Change of 0.12 mA or less is not recognized.
Minimum setting temperature: 55ºC
(Input signal: 9.6 mA)

a temp. A 40ºC
b temp. B 90ºC
c 5.9 mA
d 18.3 mA
e Input current

(2) When the water temperature setting input signal type is set to 1 (0-10 V)

External analog input signal of between 1.0 and 9.1 V: the preset temperature will be linearly interpolated.

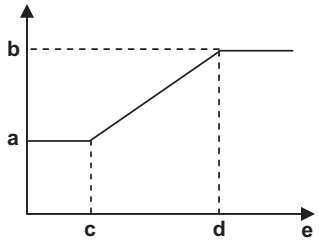

Preset temperature = (B - A) * (Input voltage - 1.0 V) / 8.1 V + A
Change of 59 mV or less is not recognized.
Minimum setting temperature: 55ºC
(Input signal: 3.4 V)

a temp. A 40ºC
b temp. B 90ºC
c 1.0 V
d 9.1 V
e Input voltage

(3) When the water temperature setting input signal type is set to 2 (1-5 V)

External analog input signal of between 1.5 and 4.5 V: the preset temperature will be linearly interpolated.

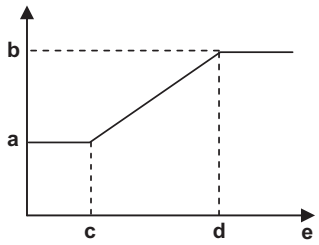

Preset temperature = (B - A) * (Input voltage - 1.5 V) / 3.0 V + A
Change of 29 mV or less is not recognized.
Minimum setting temperature: 55ºC
(Input signal: 2.4 V)

a temp. A 40ºC
b temp. B 90ºC
c 1.5 V
d 4.5 V
e Input voltage

(4) When the water temperature setting input signal type is set to 3 (2-10 V)

External analog input signal of between 2.9 and 9.1 V: the preset temperature will be linearly interpolated.

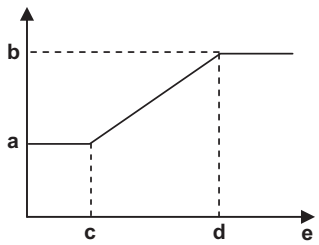

Preset temperature = (B - A) * (Input voltage - 2.9 V) / 6.2 V + A
Change of 59 mV or less is not recognized.
Minimum setting temperature: 55ºC
(Input signal: 4.8 V)

a temp. A 40ºC
b temp. B 90ºC
c 2.9 V
d 9.1 V
e Input voltage

5-6-5. Scheduled operation

Configure the schedule settings using a remote controller (PAR-W31MAA) or a system controller (AE-200).

5-6-6. Peak-demand control operation

Peak-demand control is a function used to control the power consumptions of the units during peak-demand hours.

The number of units in operation and the compressor's maximum operating frequency will be controlled according to the peak-demand control signal.

Individual system control	Multiple system control
Individual unit control Maximum frequency = Maximum capacity under peak-demand control	Depending on the peak-demand control setting that is made on the main unit, the number of units in operation and the maximum operating frequency of the units in operation will be adjusted.

Setting procedures

Set the maximum capacity setting on the circuit board.

Step 0

Set the ON/OFF switch (SWS1) to OFF.

Set SWS1 to OFF from the remote controller or with the local switch.

Settings cannot be changed unless the ON/OFF setting is set to OFF. *1

Step 1

Set the dip switches SW2 and SW3.

Set the dip switches on the circuit board as follows before making the settings for the items described in this section.

SW2	SW3					
10	5	6	7	8	9	10
OFF	OFF	OFF	OFF	OFF	ON	OFF

Step 2

Select the desired item with the push switch SWP3.

Press the push switch SWP3 to select item code 2.

Press the push switches SWP1 or SWP2 to change the value of the selected item.

The value will keep blinking while it is being changed.

Step 3

Press the push switches SWP1 (↑) or SWP2 (↓) to increase or decrease the value.

Settings table

Settable item	Item code	Initial value	Unit	Setting			Setting change from an optional remote controller
				Increments	Lower limit	Upper limit	
Maximum capacity setting	2	100	%	5	0	100	Not possible

Step 4

Press the push switch SWP3 to save the change.

Press SWP3 once within one minute of changing the setting with SWP1 or SWP2 to save the setting.

Once the new setting is saved, the display will stop blinking and stay lit. The display will, then, return to the item code display mode.

If SWP3 is not pressed within one minute, the change will not be saved and the display will return to the item code display mode.

- If the peak-demand control contact is ON, units will operate at the maximum capacity that was set in the steps above.

---

*1: The maximum frequency may be restricted depending on the inputs of maximum demand capacity and maximum low-noise capacity. Refer to the following page(s) for detail."Control values for using power save and demand control" (p. 93)

5-6-7. Setting the total number of units for a multiple system

Step 0

Set the ON/OFF switch (SWS1) to OFF.

Set SWS1 to OFF from the remote controller or with the local switch.

Settings cannot be changed unless the ON/OFF switch is set to OFF.

Step 1

Set the dip switches SW2 and SW3.

Set the dip switches on the circuit board as follows to select how external inputs are received.

SW2	SW3					
10	5	6	7	8	9	10
OFF	OFF	OFF	OFF	ON	ON	ON

Step 2

Select the desired item with the push switch SWP3.

The item codes shown in the table below will appear in order every time the push switch SWP3 is pressed.

Use the push switches SWP1 and SWP2 to change the value of the selected item.

The value will keep blinking while it is being changed.

Step 3

Press the push switches SWP1 (↑) or SWP2 (↓) to increase or decrease the value.

Settings table	Item code	Increments	Lower limit	Upper limit	Initial value
Remote controller power supply setting	105	1	1	8	2
Number of connected units to M-NET *1	106	1	0	16	1
AE-200 connection	107	2	0	2	0
Function 1 *2	110	1	0	2	0
M-NET address of sub sensor *3	112	1	1	51	51
Secondary control availability *4	121	1	0	1	0

*1:Enter the total number of units including the main unit. Applicable only to the main unit.

*2:0: Sub unit

1:Main sensor

2:Sub sensor (For six-sensor method)

*3:Set the address of the sub sensor for six-sensor method.

*4:0: Secondary side control disabled

1: Secondary side control enabled

Step 4

Press the push switch SWP3 to save the change.

Press SWP3 once within one minute of changing the setting with SWP1 or SWP2 to save the setting.

Once the new setting is saved, the display will stop blinking and stay lit. The display will, then, return to the item code display mode.

If SWP3 is not pressed within one minute, the change will not be saved and the display will return to the item code display mode.

Step 5

Turn the power back on.

Reset the system.

After changing the settings, re-initialize the system. Refer to the following page(s) for detail."Re-initializing the system" (p. 48)

NOTE

- **The new setting will not be saved unless a reset is performed.**

Setting the unit addresses

Refer to the specified pages. "System configuration procedures: Multiple system" (p. 45)

5-6-8. Selecting the item that normally appears on the LED

SW2	SW3						Display content
10	5	6	7	8	9	10	
OFF	OFF	OFF	ON	OFF	OFF	OFF	Displays the operation mode. *1
OFF	OFF	ON	ON	OFF	OFF	OFF	Displays the operation mode. *2
OFF	ON	ON	OFF	OFF	OFF	OFF	Displays the current water temperature.
OFF	ON	OFF	OFF	OFF	OFF	OFF	Displays the water-temperature setting.
OFF	OFF	OFF	OFF	OFF	OFF	OFF	Displays the high and low refrigerant pressures.

*1:

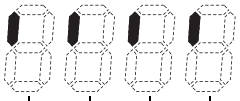

The dot lights up when the operation signal is on.
The dot lights off when the operation signal is off.

"A" will be displayed while the compressor is in operation.
"S" will be displayed while the compressor is stopped.

"S" will be displayed while the fan is forced to operate.
"-" will be displayed when this function is disabled.

"d" will be displayed when the peak-demand control function is enabled.
"-" will be displayed when this function is disabled.

Displays the operation mode.
"H" will be displayed during water-heating operation.
"d" will be displayed during a defrost cycle.
"F" will be displayed while the pump is being operated to prevent freeze-up.

*2:



Displays the system control mode.
"S" will be displayed when the multiple system control option is used.
"A" will be displayed when the individual system control option is used.

6. Electrical Wiring Installation

6-1. Main Power Supply Wiring and Switch Capacity

Schematic Drawing of Wiring (Example)

(A): Switch (with current breaking capability)
(B): Current leakage breaker
(C): Outdoor unit

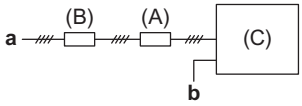

a 3N~380-415 V
L_1, L_2, L_3, N
b PE (Protective Earth)

Main power supply wire size, switch capacities, and system impedance

Model	Minimum wire thickness (mm^2)			Current leakage breaker	Local switch (A)		No-fuse breaker (A)	Max. Permissive System Impedance
	Main cable	Branch	Ground		Capacity	Fuse		
QAHV-N560YA-HPB	10	–	10	63 A 100 mA 0.1 sec. or less	63	63	63	0.21 Ω

en

1) Use a dedicated power supply for each unit. Ensure that each unit is wired individually.
2) When installing wiring, consider ambient conditions (e.g., temperature, sunlight, rain).
3) The wire size is the minimum value for metal conduit wiring. If voltage drop is a problem, use a wire that is one size thicker.
Make sure the power-supply voltage does not drop more than 10%.
4) Specific wiring requirements should adhere to the wiring regulations of the region.
5) Power supply cords of appliances for outdoor use shall not be lighter than polychloroprene sheathed flexible cord (design 60245 IEC57).
6) A switch with at least 3 mm contact separation in each pole shall be provided by the Air Conditioner installer.
7) Do not install a phase advancing capacitor on the motor. Doing so may damage the capacitor and result in fire.
8) Depending on the installation conditions (power-supply imbalance, etc.), the amount of current may increase. Select a breaker with proper capacity to suit the local usage conditions.

⚠ WARNING

- **Be sure to use specified wires and ensure no external force is imparted to terminal connections. Loose connections may cause overheating and fire.**
- **Be sure to use the appropriate type of overcurrent protection switch. Note that overcurrent may include direct current.**

⚠ CAUTION

- **Some installation sites may require an installation of an earth leakage breaker for the inverter. If no earth leakage breaker is installed, there is a danger of electric shock.**
- **Only use properly rated breakers and fuses. Using a fuse or wire of the wrong capacity may cause malfunction or fire.**

Note

- **This device is intended for the connection to a power supply system with a maximum permissible system impedance shown in the above table at the interface point (power service box) of the user's supply.**
- **Ensure that this device is connected only to a power supply system that fulfills the requirements above. If necessary, consult the public power supply company for the system impedance at the interface point.**
- **This equipment complies with IEC 61000-3-12 provided that the short-circuit power S_{SC} is greater than or equal to S_{SC} (*1) at the interface point between the user's supply and the public system. It is the responsibility of the installer or user of the equipment to ensure, in consultation with the distribution network operator if necessary, that the equipment is connected only to a supply with a short-circuit power S_{SC} greater than or equal to S_{SC} (*1).**

*1

S_{SC} (MVA)
2.62 Ω

Control cable specifications

Remote controller cable	Size	0.3 - 1.25 mm^2 (Max. 200 m total) *2
	Recommended cable types	CVV
M-NET cable between units *1	Size	Min. 1.25 mm^2 (Max. 120 m total)
	Recommended cable types	Shielded cable CVVS, CPEVS or MVVS
External input wire size		Min. 0.3 mm^2
External output wire size		1.25 mm^2

*1:Use a CVVS or CPEVS cable (Max. total length of 200 m) if there is a source of electrical interference near by (e.g., factory) or the total length of control wiring exceeds 120 m.

*2:When the wiring length exceeds 10 m, use wire of 1.25 mm^2.

6-2. Wiring for Configuring Secondary Side Control System

To configure a secondary side control system, you need to connect the wiring of the following three devices from the secondary side water circuit to the primary side unit.

1) Flow sensor
2) Secondary side thermistor
3) Pump + flow rate adjustment device
(three-way valve, two-way valve, or inverter)

[1] Wiring of secondary side circuit

Perform the installation work of steps (1) to (4) below.

en

(1) Open the panel

Use a screwdriver to remove the service panel, terminal block box cover, and control box cover (only for system using flow rate adjustment valve (two-way valve or three-way valve)).

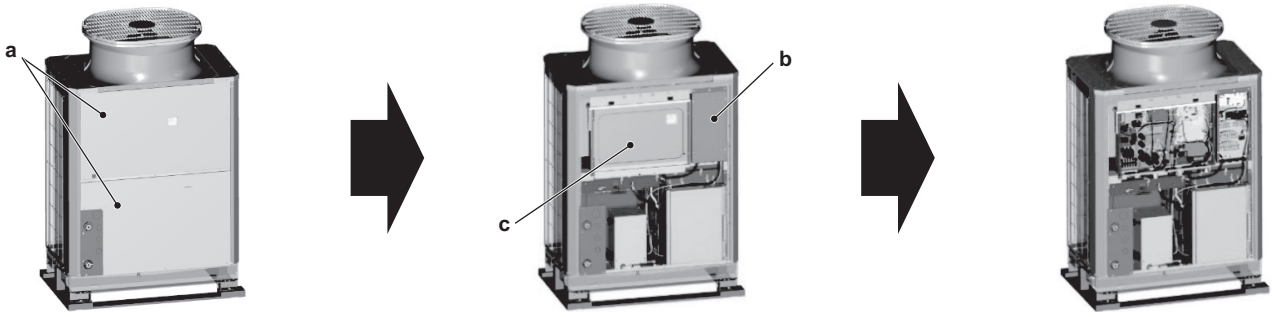

a Service panel
b Terminal block box cover
c Control box cover
- Remove it only for a system using a flow rate adjustment valve.

(2) Thread the wiring through into the unit

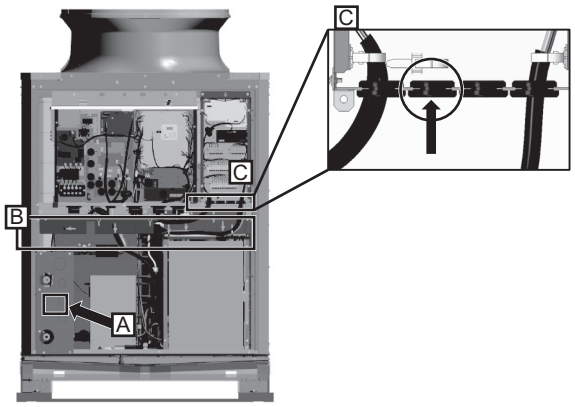

1) Thread the flow sensor wiring through A in the figure.
2) Hold the wiring with the cable strap inside the unit indicated as B in the figure to keep it out of contact with the pipes and other components.
3) Thread the wiring through the rubber bush indicated as C in the figure (second one from the left).
- For details on the opening procedure of A and the wiring of B, refer to the specified pages. "Cable Connections" (p. 71)

(3) Wiring connections

1) Connect the flow sensor and flow rate adjustment device

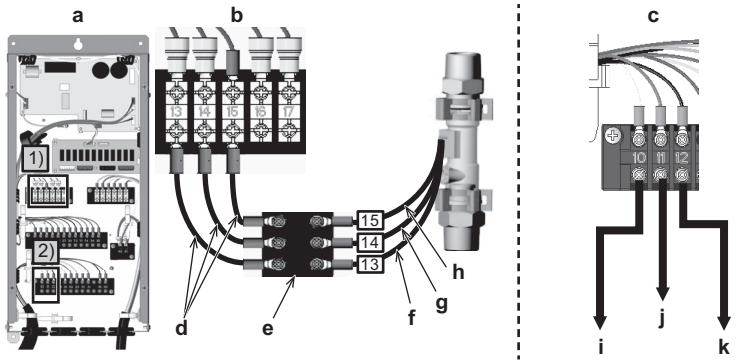

a Terminal block box
b Flow sensor
c Flow rate adjustment device
d Wiring
e Terminal block
f Red
g White
h Black
i +10 V or +12 V
j 0-10 V
k GND

Connect the flow sensor wiring to the terminal block inside the BOX. The numbers on the wirings correspond to the numbers on the terminal block.
Connect each wiring to the correct terminal.
When done, hold the excess wiring with the supplied cable tie (long). Also, hold the wirings in place with a cable tie (long) where indicated as B in the figure to keep them out of contact with the pipes and other components.

- The 10-V (12-V) power supply to be connected to No. 10 on the terminal block is not supplied.

- For details on the wiring procedure of the separately sold thermistor, refer to the separately sold kit Q-1SCK.
- For a system that outputs the pump on/off signal from the unit (system that uses a flow rate adjustment valve), connect the wires to 1-3 of CN512.

(4) Close the panel

Using a screwdriver, re-place the SERVICE PANEL and the CONTROL BOX (SUB) cover.

6-3. Cable Connections

[1] Schematic Diagram of a Unit and Terminal Block Arrangement

To remove the front panel of the control box, unscrew the four screws and pull the panel forward and then down.

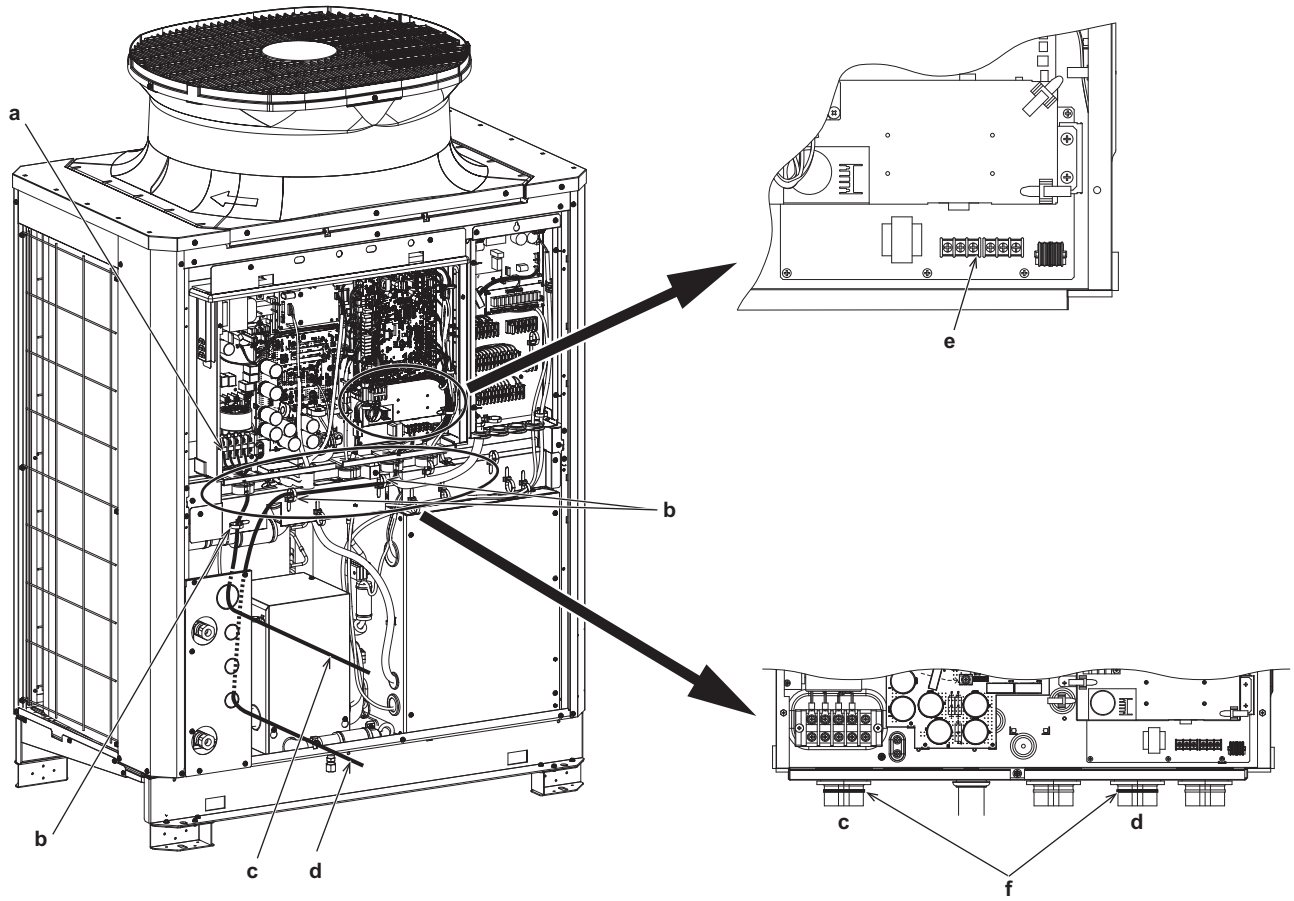

a Power supply terminal block
b Cable strap
c Power wire
d Transmission cable
e Control terminal block
f Fix in place with a cable tie.

IMPORTANT

- Power supply cables larger than 25 mm^2 in diameter are not connectable to the power supply terminal block (TB1). Use a pull box to connect them.

NOTE

- Make sure the cables are not coming out of the rubber bushing cut.

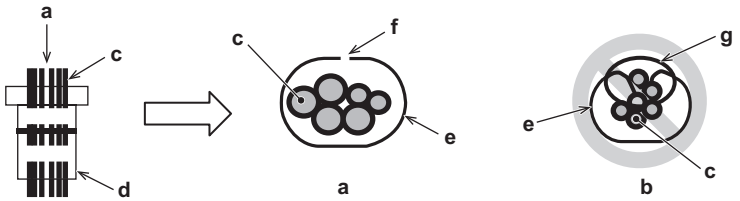

a Top view
b Cross-sectional view
c Wiring
d Rubber bushing
e Rubber bushing (oval part)
f Cut
g Cables are coming out of the rubber bushing.

- When threading the wiring through the rubber bushing, make sure the rubber bushing will not come off the sheet metal on the control box guard.



a Sheet metal on the guard
b Rubber bushing

- When tying the supplied tie band around the rubber bushing, make sure to leave no gap between the ends.



a Tie band
b Cut on the rubber bushing
c Overlapped rubber bushing
d There is a gap in the rubber bushing.
e Approx. 20 mm (13/16 in)
f **IMPORTANT:**
When putting the tie band on the rubber bushing, make sure the ends of the rubber bushing overlap each other as shown in the figure above.
- If there is a gap, water from snow or rain may enter, resulting in equipment damage.

A power wire exceeding the specified power wire thickness cannot be connected to the power terminal block (TB1). Use a separate pull box.
To ensure that the transmission cable is not affected by electrical noise from the power cable, route the power cable away from the transmission cable (distance of at least 50 mm (2 in)).

6-4. Precautions when fastening screws

- Control boxes house high-voltage and high-temperature electrical parts.
- They may still remain energized or hot after the power is turned off.
- When opening or closing the front cover of the control box, keep out of contact with the internal parts.
  Before inspecting the inside of the control box, turn off the power, leave the unit turned off for at least 10 minutes, and check that the voltage of the electrolytic capacitor (inverter main circuit) has dropped to 20 VDC or less.
  It will take approximately 10 minutes until the voltage is discharged after power off.
- **Perform the service after disconnecting the fan board connector (CNINV). To plug or unplug connectors, check that the outdoor unit fan is not rotating and that the voltage of capacitor in the main circuit is 20 VDC or below. The capacitor may collect a charge and cause an electric shock when the outdoor unit fan rotates in windy conditions.** Refer to the wiring nameplate for details.
  If the outdoor unit fan is rotated by external forces such as strong winds, the main circuit capacitor can be charged and cause an electric shock.
  Refer to the wiring nameplate for details.
  Reconnect the connector (CNINV) back to the fan board after servicing.
- When the power is on, the compressor or heater is energized even while the compressor is stopped.
  It is energized to evaporate the liquid refrigerant that has accumulated in the compressor.
- When replacing the internal electrical components of the control box, tighten the screws to the recommended tightening torque as specified below.

Recommended tightening torque for the internal electrical components of the control box

Screw	Recommended tightening torque (N · m)
M3	0.69
M4	1.47
M5	2.55
M6	2.75
M8	6.20

*1:When replacing semiconductor modules (e.g., diode stack, IPM, INV board (with IPM), fan board (with IPM)), apply heatsink silicone evenly to the mounting surface of the semiconductor module (or the semiconductor module on the back of the circuit board). Next, tighten the screws holding the semiconductor module to one-third of the specified torque, and then tighten the screws to the specified torque.

*2:Deviating from the recommended tightening torque may cause damage to the unit or its parts.

Take the following steps to ensure that the screws are properly tightened.

(1) Ensure that the spring washers are parallel to the terminal block.

Even if the tightening torque is observed, if the washers are not parallel to the terminal block, then the semiconductor module is not installed properly.

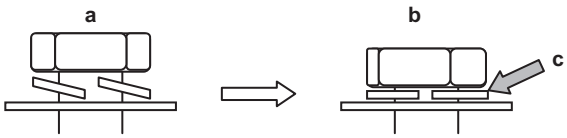

a Loose screws
b Proper installation
c Spring washers are parallel to the terminal block

(2) Check the wires are securely fastened to the screw terminals.

- **Screw the screws straight down so as not to damage the screw threads.**
  Hold the two round terminals back to back to ensure that the screw will screw down straight.
- **After tightening the screw, mark a line through the screw head, washer, and terminals with a permanent marker.**

Example

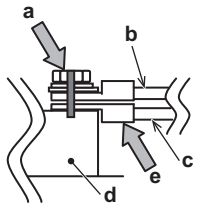

a Mark a line.
b Daisy-chain (transmission line only)
c Transmission lines, centralized transmission lines
d Indoor-outdoor transmission line terminal block, and centralized controller transmission line
e Place the round terminals back to back.

Poor contact caused by loose screws may result in overheating and fire.
Continued use of the damaged circuit board may cause overheating and fire.

6-5. Wire Knockout Hole and Conduit

- Punch out the knockout hole for wire routing at the bottom of the front panel with a hammer.
- When putting wires through knockout holes without protecting them with a conduit tube, deburr the holes and protect the wires with protective tape.
- If damage from animals is a concern, use a conduit tube to narrow the opening.

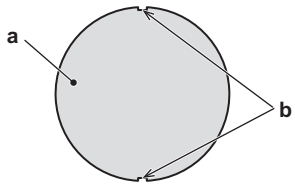

a Knockout hole
b Burr

6-6. Electrical Wiring Diagram

QAHV-N560YA-HPB(-BS) ELECTRICAL WIRING DIAGRAM

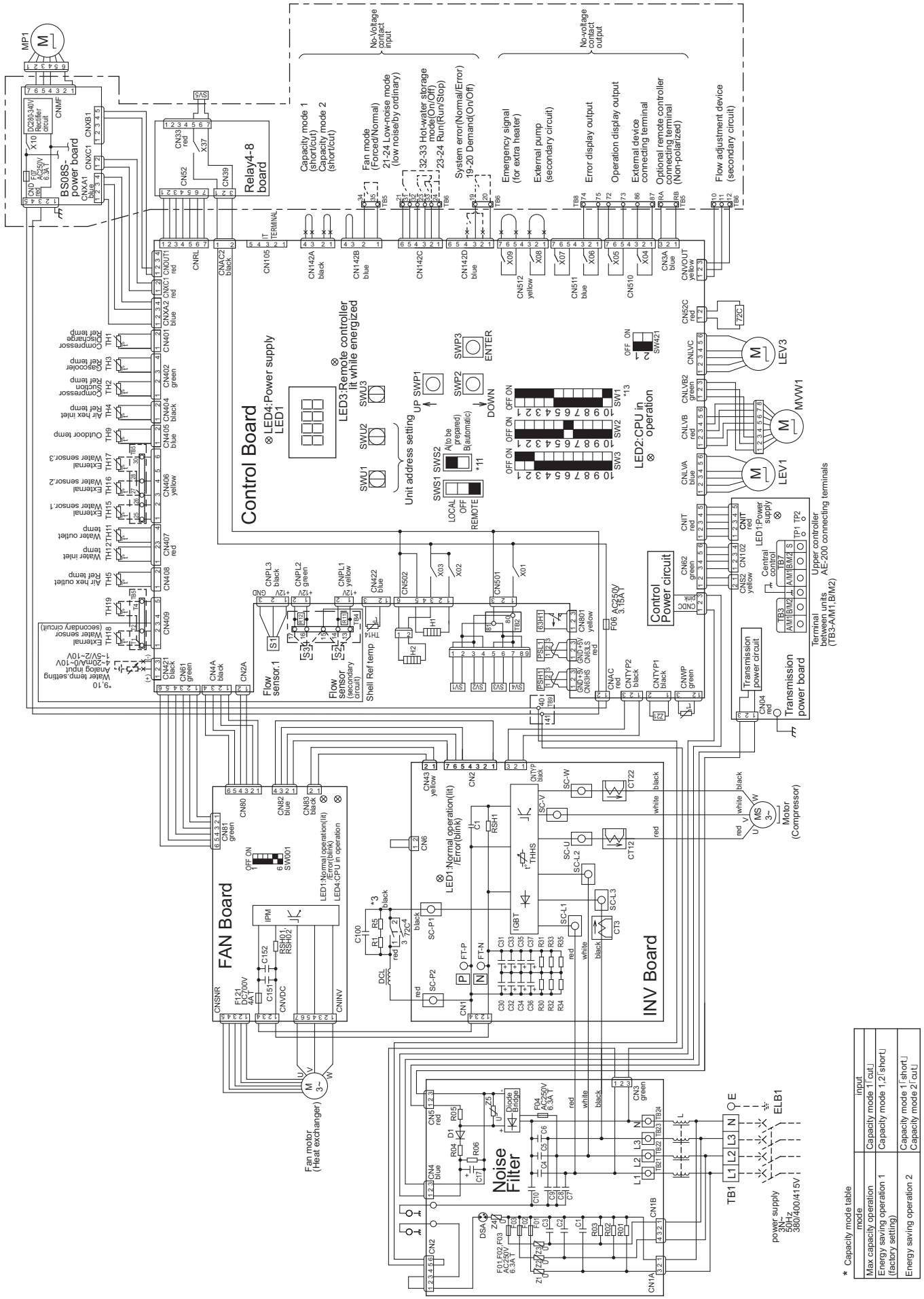

en

Note

1. The broken lines indicate the optional parts,field-supplied parts,and field work.
2. Dashed lines indicate sub box
3. Faston terminals have a locking function.
   Press the tab in the middle of the terminals to remove them.
   Check that the terminals are securely locked in place after insertion.
4. The symbols of the field connecting terminals are as follows.
   ○:Terminal block ×:Connection by cutting the short circuit wire
5. The method of input signal of operation can choose one of optinal remote controller or no-voltage input.
6. Leave a space of at least 5 cm between the low voltage external wiring (no-voltage contact input and remote controller wiring) and wiring of 100V or greater. Do not place them in the same conduit tube or cabtyre cable as this will damage the circuit board.
7. When cabtyre cable is used for the control cable wiring, use a separate cabtyre cable for the following wiring. Using the same cabtyre cable may cause malfunctions and damage to the unit.
   (a) Optional remote controller wiring
   (b) No-voltage contact input wiring
   (c) No-voltage contact output wiring
   (d) Remote water temperature setting
8. Use a contact that takes 12VDC 1mA for no-voltage contact input.
9. Need to selects either Water temperature setting input signal.
   Set the SW421 as shown in the table below.

	SW421-1	SW421-2
4～20mA	ON	ON
0～10V	OFF	OFF
1～ 5V	OFF	ON
2～10V	OFF	OFF

10. Use a 4-20mA signal output device with insulation.
    Feeding 30mA or more current may damage the circuit board.
11. For prevention of damage of the pump, SWS2 is set in "A"(factory setting).
    Change the slide switch SWS2「B(automatic)」in Test Run.
12. Use a contact that takes 250VAC, 10mA or above, and 1A or below for no-voltage contact output.
13. How to set the SW1 1-5 settings (model setting) vary with the manufacturing year/month of the product. See the electrical wiring diagram on the control box for detailed information about switch settings.

Symbol explanation

Symbol	Explanation
CT12	AC current sensor
CT22	
CT3	
C100	Capacitor (Electrolysis)
DCL	DC reactor
F01	Fuse
F02	
F03	
F04	
F06	
F07	
F121	
H1	Crankcase heater (for heating the compressor)
H2	Electric heater (Antifreeze)
LEV1	Electronic expansion valve (Main circuit)
LEV3	Electronic expansion valve (Injection)
M	Fan motor
MP1	Pump motor
MS	Compressor motor
MVW1	Water flow control valve
PSH1	High pressure sensor
PSL1	Low pressure sensor
R11	Resistance (for Water flow rate sensor 2)
R12	Resistance (for Water flow rate sensor 3)
R1	Electrical resistance
R5	
SV1	Solenoid valve (Defrost)1
SV2	Solenoid valve (Defrost)2
SV3	Solenoid valve (Defrost)3
SV4	Solenoid valve (Defrost)4
SV5	Solenoid valve (Injection circuit)
S1	Water flow rate sensor
THHS	IGBT temperature
TH1～5,9,11,12,14	Thermistor
Z21	Function setting connector
63H1	High pressure switch
72C	Electromagnetic relay (Inverter main circuit)
*TH15～18	Thermistor
*S2,3	Water flow rate sensor
<ELB1>	Earth leakage breaker

* of symbol item is the optional parts, <> is field-supplied parts.

6-7. External Input/Output

When using a local controller, refer to the table below for the types of input/output signals that are available and the operations that correspond to the signals.

Input type

Dry contact		ON (Close)	OFF (Open)	Terminal block/ connector	Three-sensor method Six-sensor method			Local control method	
					Main sensor	Sub sensor *2	Sub unit	Main unit	Sub unit
(a) UNIT OPERATION	Run/ Stop	The unit will go into operation when the water temperature drops below the preset temperature.	The unit will stop except when the unit is in the Anti-Freeze mode.	TB6 23-24	B *3	-	-	A	-
(b) FAN MODE	Forced/ Normal	The fan will remain in operation after the compressor has stopped (including when the OPERATION status is "STOP").	The fan will stop when the compressor stops.	TB5 34-35	B	-	-	B	-
(c) PEAK-DEMAND CONTROL	On/Off	The unit will operate at or below the maximum capacity level that was set for the Peak-demand control setting.	-	TB6 19-20	B	B	B	B	B
(d) Hot water storage mode	On/Off	Heating operation with the set outlet hot water temperature	Stop	TB6 32-33	B *3	-	-	A	-
(e) System error	On/Off	Normal	Error	CN14D 2-4	B	B	B	B	B
(f) Low-noise mode	On/Off	Operation using the set capacity as an upper limit	Normal operation	TB6 21-24	B	B	B	B	B
Analog				Terminal block/ connector	Main sensor	Sub sensor *2	Sub unit	Main unit	Sub unit
(g) WATER TEMP SETTING CONTROL		Water temperature control can be set by using the external analog input to the CN421 on the circuit board. One analog input type can be selected from the following types: 4-20 mA, 1-5 V, 0-10 V, or 2-10 V.		CN421 2(+)-3(-)	B	-	-	B	-
(h) EXTERNAL WATER SENSOR 1 (optional)		-		TB5 25-26	A	A	-	-	-
(i) EXTERNAL WATER SENSOR 2 (optional)		-		TB5 27-28	A	A	-	-	-
(j) EXTERNAL WATER SENSOR 3 (optional)		-		TB5 27-30	A	A	-	-	-
(k) EXTERNAL WATER SENSOR (secondary circuit)		-		TB5 T1-T2	A *4	A *4	A *4	A *4	A *4
(l) FLOW SENSOR (secondary circuit)		-		TB4 13-14-15	A *4	A *4	A *4	A *4	A *4

Output type

Contact type		Conditions in which the contact closes (turns on)	Conditions in which the contact opens (turns off)	Terminal block/ connector	Main sensor	Sub sensor *2	Sub unit	Main unit	Sub unit
(m) EXTERNAL DEVICE SIGNAL (secondary circuit pump)		-		CN512 1-3	A *4	A *4	A *4	A *4	A *4
(n) EXTERNAL INV (flow adjustment device, secondary circuit)		-		TB6 10-11-12	A *4	A *4	A *4	A *4	A *4
(o) ERROR INDICATOR	Close/ Open	The unit has made an abnormal stop.	During normal operation	TB8 74-75	B	B	B	B	B
(p) OPERATION INDICATOR	Close/ Open	The "UNIT OPERATION" contact (item (a) above) or the ON/OFF button on the remote controller is ON.	The "UNIT OPERATION" contact (item (a) above) or the ON/OFF button on the remote controller is OFF.	TB8 72-73	B	B	B	B	B
(q) EMERGENCY SIGNAL	Close/ Open	Outside temperature is at or below 1ºC	Outside temperature is at or above 3ºC	CN512 5-7	B	B	B	B	B
(r) EXTERNAL DEVICE CONNECTING TERMINAL	Close/ Open	During freeze-up protection operation During pump residue operation	Other than the items at left	TB8 86-87	B	B	B	B	B

RC/SC/ M-NET

Contact type	Conditions in which the contact closes (turns on)	Conditions in which the contact opens (turns off)	Terminal block/ connector	Main sensor	Sub sensor *2	Sub unit	Main unit	Sub unit
REMOTE CONTROLLER	PAR-W31MAA		TB5 RA-RB	B	-	-	-	-
SYSTEM CONTROLLER	AE-200		TB7 MA-MB *1	B	-	-	-	-
M-NET	-		TB3 MA-MB	A *5	A	A	A *5	A

A: Setting required
B: Settings are required as needed
-: No settings required

*1: When AE-200 is connected, leave the power jumper on the outdoor unit as it is (Connected to CN41 at factory shipment). If the power jumper is connected to CN40, power will excessively be supplied and AE-200 will not properly function.
*2: Only Six-sensor method
*3: Required if not connected to PAR-W31MAA or AE-200.
*4: Required only when secondary control is enabled.
*5: Required only when multiple units are connected.

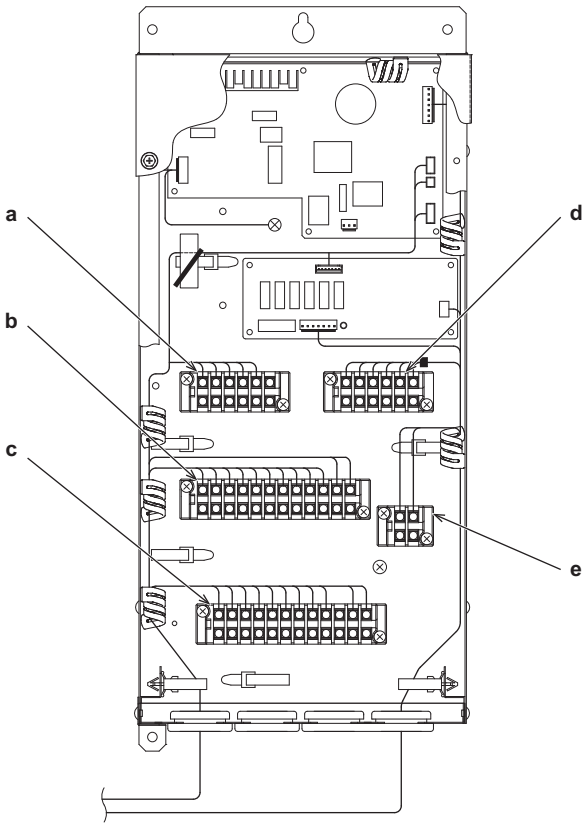

a Control terminal block (TB4) (Optional flow sensor)
b Control terminal block (TB5) (Optional thermistor Remote controller, Fan mode)
c Control terminal block (TB6) (No-voltage contact input)
d Control terminal block (TB8) (No-voltage contact output)
e Power terminal block (TB9) (High voltage caution)

7. Troubleshooting

Troubleshooting must be performed only by personnel certified by Mitsubishi Electric.

7-1. Diagnosing Problems with No Available Error Codes

If a problem occurs, please check the following. If a protection device has tripped and brought the unit to stop, resolve the cause of the error before resuming operation.

Resuming operation without removing the causes of an error may damage the unit and its components.

Problem	Check item		Cause	Solution
The unit does not operate.	The fuse in the control box is not blown.	The power lamp on the circuit board is not lit.	The main power is not turned on.	Switch on the power.
	The fuse in the control box is blown.	Measure the circuit resistance and the earth resistance.	Short circuit or ground fault	Resolve the cause, and replace the fuse.
	Automatic Start/Stop thermistor has tripped.	Water temperature is high.		Normal
		Water temperature is low.	The setting for the automatic Start/Stop thermistor is too low.	Change the setting for the automatic Start/Stop thermistor.

en

7-2. Diagnosing Problems Using Error Codes

If a problem occurs, please check the following before calling for service.

1) Check the error code against the table below.
2) Check for possible causes of problems listed in the "Cause" column that correspond to the error code.
3) If the error codes that appear on the display are not listed in the table below, or no problems were found with the items listed in the "Cause" column, please consult your dealer or servicer.

Diagnosing Problems Using Error Codes

Error code *1 (PCB *2 RC M-NET)	Error type	Cause (Installation/Setting error)	Cause (Parts problems)	Error reset *3	
				Unit side (PCB)	Remote
				SWS1	Operation SW
0100	Unreset errors	Some of the errors have not been reset.		-	-
4106 (254)	Power failure	Power failure occurred when the operation switch is switched on.		A	A
4106 (255)	Power supply fault		• Transmission power board fault	-	-
2613	Water flow drop		• Water flow control valve fault • Pump fault	B	B
1301	Vacuum protection fault	• Outside temperature is below the minimum usage temperature. • Sudden frosting or heavy snow has clogged the heat exchanger.	• Low-pressure sensor fault • Suction refrigerant temperature thermistor fault • Electric expansion valve fault on the main circuit • Fan motor error/broken motor wire • Refrigerant shortage (gas leakage)	B	B
1302	High pressure fault		• Electronic expansion valve fault • High-pressure sensor fault • Water flow control valve fault • Pump fault	B	B
1104	Low evaporation temperature fault		• Low-pressure sensor fault • Suction refrigerant temperature thermistor fault • Electric expansion valve fault on the main circuit • Fan motor error/broken motor wire • Refrigerant shortage (gas leakage)	B	B
2601	Water supply cutoff (Water flow rate sensor)	Water flow drop	• Water flow control valve fault • Pump fault • Water flow rate sensor	B	B
2601 (2)	Secondary side water supply cutoff error	Water circuit air entrainment, water strainer clogged	Flow sensor fault, pump fault, motor-operated valve fault, water flow rate control valve fault	B	B
2138	Outlet water temperature fault (low temp)		• Fan motor error/broken motor wire • Refrigerant shortage (gas leakage)	B	B
Thermistor fault (5101, 5102, 5103, 5104, 5105, 5109, 5111, 5112, 5114, 5115, 5116, 5117, 5118 (when the secondary side control is enabled))					
5101	Discharge temp. sensor (TH1)		Broken or shorted thermistor wiring	B	B
5102	Suction temp. sensor (TH2)		Broken or shorted thermistor wiring	B	B
5103	Heat exchanger outlet refrigerant temp. sensor (TH3)		Broken or shorted thermistor wiring	B	B
5104	Air-side heat exchanger inlet refrigerant temp. sensor (TH4)		Broken or shorted thermistor wiring	B	B
5105	Air-side heat exchanger outlet refrigerant temp. sensor (TH5)		Broken or shorted thermistor wiring	B	B
5109	Outside temp. sensor (TH9)		Broken or shorted thermistor wiring	B	B
5111	Outlet water temp. sensor (TH11)		Broken or shorted thermistor wiring	B	B
5112	Inlet water temp. sensor (TH12)		Broken or shorted thermistor wiring	B	B
5114	Shell temp. sensor (TH14)		Broken or shorted thermistor wiring	B	B
5115	External water sensor 1 (TH15)		Broken or shorted thermistor wiring	B	B
5116	External water sensor 2 (TH16)		Broken or shorted thermistor wiring	B	B
5117	External water sensor 3 (TH17)		Broken or shorted thermistor wiring	B	B
5118 (when the secondary side control is enabled)	Secondary side water sensor (TH18)		Broken or shorted thermistor wiring	B	B
5201	High-pressure sensor fault/high-pressure fault		Broken or shorted pressure sensor wiring	B	B
5202	Low-pressure sensor fault/low-pressure fault		Broken or shorted pressure sensor wiring	B	B

Error code *1 (PCB *2 RC M-NET)	Error type	Cause (Installation/Setting error)	Cause (Parts problems)	Error reset *3	
				Unit side (PCB)	Remote
				SWS1	Operation SW
1102	Discharge temperature fault		• Water flow control valve fault • Pump fault • High-pressure sensor fault • Discharge refrigerant thermistor fault • Linear expansion valve fault (Main circuit LEV, injection LEV) • Refrigerant shortage (gas leakage)	B	B
1105	Heat exchanger outlet temperature fault		• Water flow control valve fault • Pump fault	B	B
1502	Liquid refrigerant floodback		• Fan motor error/broken motor wire • Low-pressure sensor fault • Discharge refrigerant temperature thermistor fault • Electronic expansion valve fault	B	B
7113	Model setting error 1	Dip switches on the PCB were set incorrectly during maintenance.		C	C
7117	Model setting error 2		• Resistor Z21 fault (connected to the Main control board)	C	C
4115	Power supply frequency fault	Power supply frequency is a frequency other than 50 Hz or 60 Hz.		C	C
4102	Open phase	There is an open phase.	• Circuit board fault	C	C
Inverter error Electric current related errors during operation					
4250 4255 (101)	IPM error		• INV board fault (4250) • Fan board fault (4255) • Ground fault of the compressor • Coil problem • IPM error (loose terminal screws, cracked due to swelling) • Items listed under "Heatsink overheat protection" below	B	B
4250 4255 (102)	ACCT overcurrent		• INV board fault (4250) • Fan board fault (4255) • Ground fault of the compressor • Coil problem • IPM error (loose terminal screws, cracked due to swelling)	B	B
4250 4255 (106)	Overcurrent relay trip (momentary value) (During operation)			B	B
4250 4255 (107)	Overcurrent relay trip (effective value) (During operation)			B	B
4250 4255 (104)	Short-circuited IPM/ground fault (During operation)		• Ground fault of the compressor • IPM error (loose terminal screws, cracked due to swelling)	B	B
4250 4255 (105)	Overcurrent error due to a short-circuited (During operation)	Inter-phase voltage drop (Inter-phase voltage at or below 180 V)	• Ground fault of the compressor • Shorted output wiring	B	B
Inverter error Current related problems at start up					
4250 4255 (101)	IPM error (At startup)		• INV board fault (4250) • Fan board fault (4255) • Ground fault of the compressor • Coil problem • IPM error (loose terminal screws, cracked due to swelling) • Items listed under "Heatsink overheat protection" below	B	B
4250 4255 (102)	ACCT overcurrent (At startup)		• INV board fault (4250) • Fan board fault (4255) • Ground fault of the compressor • Coil problem • IPM error (loose terminal screws, cracked due to swelling)	B	B
4250 4255 (106)	Overcurrent relay trip (momentary value) (At startup)			B	B
4250 4255 (107)	Overcurrent relay trip (effective value) (At startup)			B	B
Inverter error Voltage related problems during operation					
4220 4225 (108)	Bus voltage drop protection	Momentary power failure/power failure Power supply voltage drop (Inter-phase voltage is 350 V or below.) Voltage drop	• Wirings that are connected to SC-P1, SC-L2, and SC-L1 on the INV board are broken. • INV board fault (4220) • Fan board fault (4225) • 72C fault	B	B
4220 4225 (109)	Bus voltage rise protection	Incorrect power supply voltage Bus voltage is 820 V or higher.	• INV board fault (4220) • Fan board fault (4225)	B	B

Error code *1 (PCB *2 RC M-NET)	Error type	Cause (Installation/Setting error)	Cause (Parts problems)	Error reset *3	
				Unit side (PCB)	Remote
				SWS1	Operation SW
4220 4225 (111)	Logic error	Malfunction due to external noise interference • Faulty grounding • Improper transmission and external wiring installation (Shielded cable is not used.) • Low-voltage signal wire and high-voltage wire are in contact. (Placing the signal wire and power wire in the same conduit)	• INV board fault (4220) • Fan board fault (4225)	B	B
Inverter error					
4220 4225 (131)	Voltage meter error at start up (Bus voltage drop protection at start up (detected by the Main unit side))	Power supply voltage drop	• INV board fault • Fan board fault • 72C fault • R1, R5 fault	B	B
4230 4235	Heatsink fault (Heatsink overheat protection)	Clogged heatsink cooling air passage	• Fan motor fault • INV board fan output fault • IPM error (loose terminal screws, cracked due to swelling)	B	B
4240 4245	Overload protection	Short-cycling of air (reduced air flow) Clogged heatsink cooling air passage Power supply voltage drop (Inter-phase voltage is 350 V or below.)	• THHS sensor fault • Current sensor fault • INV board fan output fault • INV circuit fault • Compressor fault	B	B
5301 5305 (115)	ACCT sensor fault		• INV board fault • Ground fault of the compressor and IPM error	B	B
5301 (117)	ACCT sensor/circuit fault		• Poor contact at the INV board connector CNCT2 (ACCT) • ACCT sensor fault	B	B
5301 (119)	Open-circuited IPM/loose ACCT sensor		• Disconnected ACCT sensor (CNCT2) • ACCT sensor fault • Broken compressor wiring • INV circuit fault (IPM error etc.)	B	B
5301 (120)	Faulty wiring		• ACCT sensor is connected in the wrong phase. • ACCT sensor is connected in the wrong orientation.	B	B
5305 (132)	Position detection error at startup		• Wirings between the fan motor and fan board are broken. • Poor contact at the Fan board connector CNINV or CNSNR • Fan board fault • Fan motor fault	B	B
5305 (133)	Position detection error during operation	Gust or strong wind	• Wirings between the fan motor and fan board are broken. • Poor contact at the Fan board connector CNINV or CNSNR • Fan board fault • Fan motor fault	B	B
5305 (134)	RPM error before startup	Gust or strong wind	• Fan board fault • Fan motor fault	B	B
5110 (01) (05)	THHS sensor/circuit fault		• INV board fault	B	B
0403 (01) (05)	Serial communication error		• Communication error between control board and INV board (noise interference, broken wiring)	B	B
-	IPM system error	INV board switch setting error	• Wiring or connector connection between connectors on IPM-driven power supply circuit • INV board fault	B	B
Remote controller error (incl. remote controller wiring fault)					
6830	Address overlap	There are two or more of the same address.		C	C
7109	Non-consecutive address, system error	Address setting error (Non-consecutive address)		C	C
6831	Remote controller signal reception error 1	Remote controller cable is not connected. Broken wiring	• Broken remote controller wiring • Main control board communication circuit fault	-	-
6832	Remote controller signal transmission error	Communication error due to external noise interference	• Main control board communication circuit fault	-	-
6833	Remote controller over current	Remote controller cable is short		C	C
6834	Remote controller signal reception error 2	Communication error due to external noise interference	• Main control board communication circuit fault	-	-

Error code *1 (PCB *2 RC M-NET)	Error type	Cause (Installation/Setting error)	Cause (Parts problems)	Error reset *3	
				Unit side (PCB)	Remote
				SWS1	Operation SW
Multiple system error (7130, 7102)					
7130	Incompatible combination of units	Different types of units are connected to the same system.		C	C
7102	No.-of-connected-unit setting is incorrect.	No.-of-connected-unit setting is incorrect (Main unit).		C	C
4126 (1)	Analog input error (Control board (MAIN) CN421)	Analog input type fault Set Item code 1075	• Broken or Open 4-20 mA signal output device wiring (CN421)	B	B
6500	Communication error between the main and sub units Communication error between the MAIN and SUB circuits		• Resetting the error that occurred when AE-200 was disconnected: Set the value of 107 from 2 back to 0, reset the power, and reinitialize the system. Refer to the following page(s) for detail. "Configuring the Settings" (p. 39)	-	-
6600	Transmission line power supply PCB fault Communication error between the main and sub units (Simple multiple unit control mode) *7	Communication error due to external noise interference	• Broken wiring to the transmission power supply circuit board (between the main and sub units) • Transmission power supply PCB communication circuit fault	A	A
6602 6603 6606 6607 6608				-	-
5701	Water flow adjusting value limit switch error		Water flow rate control valve fault Power board fault	C	C
2518	Secondary side hot water temperature reduction error	Insufficient pump capacity Outdoor air temperature is below operating range lower limit Improper system configuration (piping length, thermistor position, etc.) Improper digital setting value of 1518 (Increase the 1518 value.)	Secondary side pump fault Secondary side heat exchanger deteriorated Flow sensor fault Secondary-side thermistor fault	B	B
2616 (1)	Secondary side heat exchanger error (Deterioration of heat exchanger)	Heat exchanger deteriorated		B	B
2616 (2)	Secondary side heat exchanger error (Heat exchanger selection error)	Initial heat exchanger selection error		B	B

*1: The codes in the parentheses in the "Error code" column indicate error detail codes.
*2: If an error occurs, error codes shown above will appear in the 4-digit digital display on the PCB.
*3: Definition of symbols in the "Error reset" column.
A: Errors that can be reset regardless of the switch settings
B: Errors that can be reset if the remote reset setting on the unit is set to "Enable" (factory setting)
Errors that cannot be reset if the remote reset setting on the unit is set to "Disable"
C: Errors that cannot be reset
-: Errors that will be automatically cancelled once its cause is removed
*4: Power failure will be detected as an error only when the "Automatic recovery after power failure" setting on the unit is set to "Disable."
(The default setting for the "Automatic recovery after power failure" setting is "Enable.")
*5: Depending on the system configuration, if communication error lasts for 10 minutes or longer, units will make an abnormal stop.
This error can be reset by turning off and then back on the unit's power.
*6: This error code will appear when multiple errors occur that are reset in different ways and when one or more of these errors have not been reset. This error can be reset by turning off and then back on the unit's power.
*7: Before resetting this error, remove its causes. Resuming operation without removing the causes of heat exchanger freeze up will cause heat exchanger damage.

7-3. Calling for Service

If the problem cannot be solved by following the instructions provided in the table on the previous pages, please contact your dealer or servicer along with the types of information listed below.

(1) Model name

The model name is a string that starts with "QAHV" and is found on the lower part of the left side of the unit.

(2) Serial number

Example: 75W00001

(3) Error code

(4) Nature of the problem in detail

Example: The unit stops approximately one minute after it was started.

8. Operating the Unit

8-1. Initial Operation

1) Make sure the Run/Stop switch that controls the unit on the local control panel is switched off.
2) Switch on the main power.
3) Leave the main power switched on for at least 12 hours before turning on the Run/Stop switch that controls the unit on the on-site control panel to warm up the compressor. (The compressor will not be warmed up if initial settings have not been made. Make sure to make initial settings.)
4) Switch on the Run/Stop switch that controls the unit on the on-site control panel.

8-2. Daily Operation

To start an operation

Switch on the Run/Stop switch that controls the unit on the local control panel, or press the ON/OFF button on the remote controller. (*1)

NOTE

The unit described in this manual features a circuit that protects the compressor from short-cycling. Once the compressor stops, it will not start up again for up to 10 minutes. If the unit does not start when the ON/OFF switch is turned on, leave the switch turned on for 10 minutes. The unit will automatically start up within 10 minutes.

To stop an operation

Switch off the Run/Stop switch that controls the unit on the on-site control panel, or press the ON/OFF button on the remote controller. (*1)

*1: Refer to the following pages for how to use the remote controller.

IMPORTANT

- Keep the main power turned on throughout the operating season, in which the unit is stopped for three days or shorter (e.g., during the night and on weekends).
- Unless in areas where the outside temperature drops to freezing, switch off the main power when the unit will not be operated for four days or longer. (Switch off the water circulating pump if the pump is connected to a separate circuit.)
- When resuming operation after the main power has been turned off for a full day or longer, follow the steps under "Initial Operation" above.
- If the main power was turned off for six days or longer, make sure that the clock on the unit is correct.
- Water that has remained in the hot-water tank or in the pipes for a long time is not hygienically suitable for use for human. Before a long period of non-use, minimize the amount of water in the hot-water tank. When restarting the use of the system, drain the water from the hot-water supply end of the hot-water tank (use as general service water), and use the newly stored water for human use, such as for bathing.

8-3. Using Units in Cold Climates

If the ambient temperature drops below 0°C, install a freeze protection heater and always keep the unit's main power and the heater ON to prevent the water in the pipes from freezing. If the ambient temperature drops below 0°C while the unit is turned off and not in use, drain the water from the pipes.

- If the ambient temperature drops below 0°C, take measures to prevent the water circuit from freezing.
- If the main power is turned off, the automatic freeze prevention control will not operate, and the frozen water circuit may damage the unit.
- Do not use brine while the unit is either in operation or stopped.

In areas where temperature drops to freezing, use an anti-freeze circuit and leave the main power turned on to prevent the water in the water circuit from freezing and damaging the unit or causing water leakage and resultant damage to the furnishings.

In areas where temperature can drop low enough to cause the water in the pipes to freeze, operate the unit often enough to prevent the water from freezing.

- Frozen water in the water circuit may cause the water to freeze, resulting in burst pipes and damage to the unit or the furnishings.

- Remove the snow off the unit before switching on the ON/OFF switch.
- In areas where the outside air drops below freezing, leave the main switch turned on even when the unit will not be operated for four days or longer. Leave the switch on the water circulation pump turned on if the pump is connected to a separate circuit.
- If the unit is left turned off for a while (e.g., overnight) when the outside temperature drops below freezing, the water in the water circuit will freeze and damage the pipes and the heat exchanger.
- The recommended electric circuit has an anti-freeze circuit. For this circuit to function, the main power must be turned on.
- If the water circulation pump is connected differently from the recommended way, make sure the circuit has some type of anti-freeze function.
  (A function that automatically operates the water circulation pump to prevent the water in the circuit from freezing when the water temperature drops.)

In cold areas (where the lowest outside temperature drops below freezing), if power is not supplied while the unit is stopped during winter, make sure to completely drain water from the piping. Failure to do so may cause the residual water to freeze, resulting in damage to the heat exchanger. Have the drainage work performed by your maintenance provider.
Before using the unit, perform a test run such as water fill test or air bleeding test again. Have the trial run performed by your maintenance provider.

Drainage method
Procedure

1) Disconnect the outlet pipe.
2) Disconnect the inlet pipe.
3) Open the drain trap at the T-shaped part.
4) Completely remove water by blowing compressed air or nitrogen (cylinder) of 0.5 to 0.6 MPa into the outlet pipe.

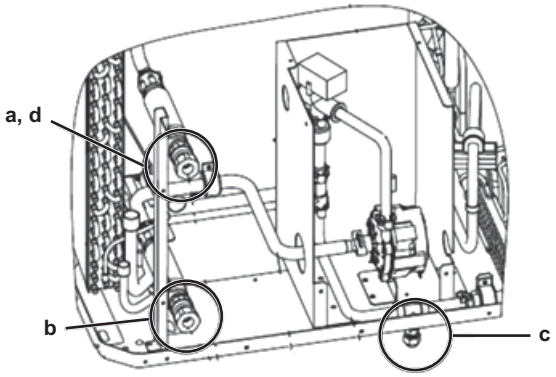

a Outlet pipe
b Inlet pipe
c Drain trap at the T-shaped part
d Blow compressed air or nitrogen.

8-4. Remote Controller Operation

Button functions

: Returns to the menu screen

: Saves the settings

: Returns to the previous screen

: Turns on/off the power

Main screen

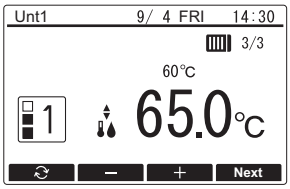

en

8-4-1. Power ON/OFF

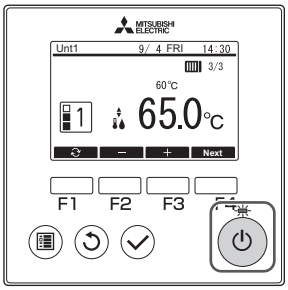

To start

Press [⏻].

The LED above [⏻] will light up in green, and operation will start.

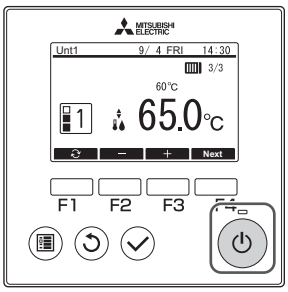

To stop

Press [⏻].

Press [F3] on the confirmation screen.

[⏻] will light off, and the operation will stop.

8-4-2. Setting the operation mode and temperature

[1] Operation mode

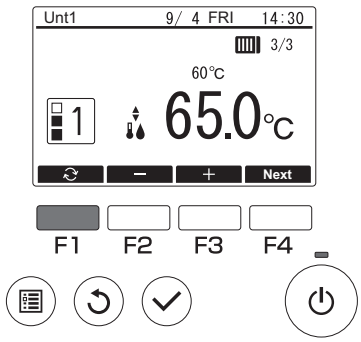

Press the [F1] button to go through the operation modes in the order of "Mode1, Mode2, and Mode3."
Select the desired operation mode.



Mode1



Mode2



Mode3

The number of modes can be set to the value which is smaller than the setting value of Item code 1507. Refer to the following page(s) for detail.
"Three-sensor method or six-sensor method setting" (p. 57)

[2] Temperature

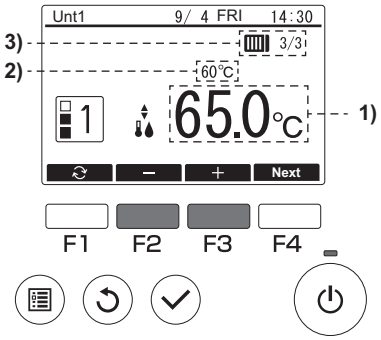

Press the [F2] button to decrease the set temperature, and press the [F3] button to increase.
The temperature can be set to the value which is equal or smaller than the setting value of Item code 9 or Function setting No. 021. Refer to the following page(s) for detail. "Table of settings items" (p. 39)"Setting the functions" (p. 95)

1) Set water temperature display
The currently set thermo-OFF temperature is displayed.
2) Control water temperature display
The thermistor temperature to be used for thermo-OFF is displayed.
3) Number of units in operation/total number of units
The number of units currently in operation and the total number of units are displayed.

8-4-3. Using the Weekly timer

Use the Weekly timer to set the ON/OFF schedule, operation mode, and temperature for each day of the week.
Weekly timer will be disabled when the schedule function is disabled and when the period timer is enabled.
Weekly timer may not be executed under certain system configurations.

Steps

Step 1

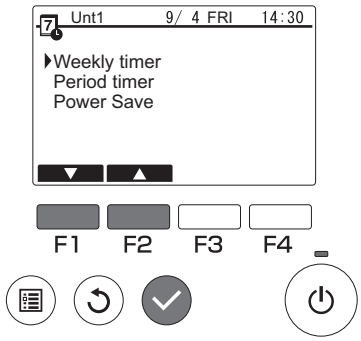

Press [☰].
Press [F3] to select [7].
Press [⊘].
On the Schedule menu, press [⊘] to select Weekly timer.

Step 2

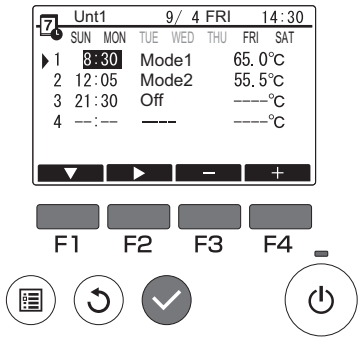

Weekly timer screen will appear.

To view the settings:
Press [F1] or [F2] to view the settings for each day.
Press [F4] to see the next page.

To change the settings:
Press [F1] or [F2] to toggle through the days. Press [F3] select a day, and press [⊘].
Multiple days are selectable by repeating the steps above.

Step 3

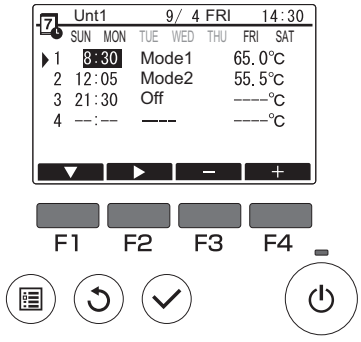

Pattern setting screen will appear.
Press [F1] to select a pattern to be set.
Press [F2] to select the item to change its settings.
Press [F3] or [F4] to change the setting for the selected item.

1) Time
Set in 5-minute increments.
Hold down the button to fast-forward.

2) Operation selection mode or Off
Available options vary with the connected unit.
Connected unit will operate unless set to Off.

3) Temperature
Settable in 0.5°C increments
Press [⊘] to save the change.

Step 4

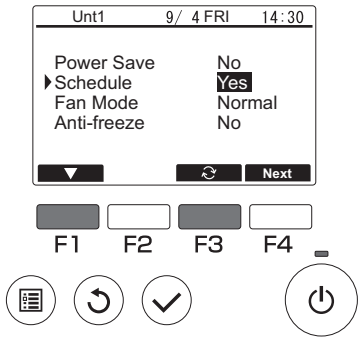

To enable schedule
Return to the main screen, and press [F4].
Press [F1] to move the cursor to Schedule.
Operation setting screen will appear.
Press [F3] to select Yes.

8-4-4. Using the Period timer

Use the Period timer to set the daily operation schedule (ON/OFF, operation mode, temperature) for specific periods.
If the periods 1 and 2 overlap, only period 1 will be valid.
Weekly timer will be disabled when the Schedule function is disabled:
When the Schedule function is disabled from the centralized controller or the connected unit, Schedule settings cannot be made from the remote controller.

Steps

Step 1

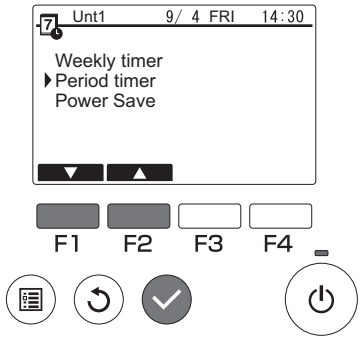

From the Schedule menu press [F1] or [F2] to select Period timer, and press [⊛].
Refer to the following page(s) for detail. "Using the Weekly timer" (p. 89)

Step 2

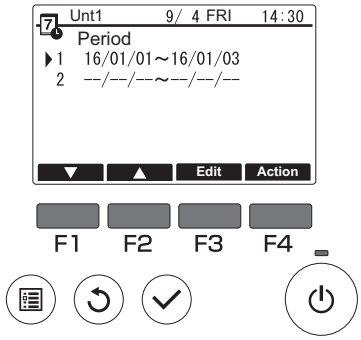

Pre-set periods will appear, if any.

Step 3

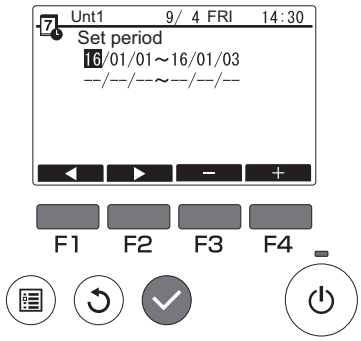

To select a period

Press [F1] or [F2] to select a period to set, and press [F3].
Press [F1] or [F2] to select the year, month, or date.
Press [F3] or [F4] to change the year, month, or date.
Press [⊘] to save the setting.

en

Step 4

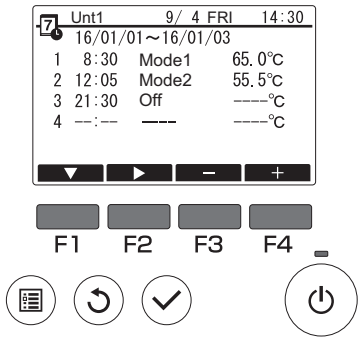

To set the operation

Press [F1] or [F2] to select a period to set, and press [F4].
Operation pattern setting screen will appear.
Set the time, mode, and temp.
(Select an item with [F1] and [F2]. Change the value with [F3] and [F4].)
Press [⊘] to save the change.

Step 5

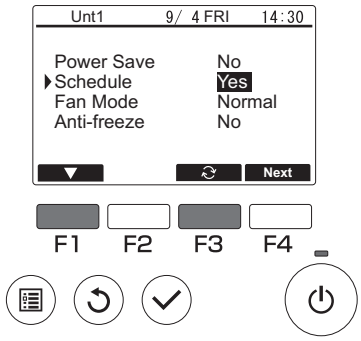

To enable schedule

Refer to the following section. "Using the Weekly timer" (p. 89)

8-4-5. Using power save

Power save is a function that regulates the compressor's rotation count and reduces power consumption during high load on a daily schedule, during specific time periods, or based on the regulated unit capacity.

Definition of a Day in using power save

Each Day starts with the time specified by the user. No periods can be specified that spans the Day.

Ex. 1: When the start of the day is specified as 22:00 on August 1 and 2, and the power save period is set to the period between 22:00 and 8:00

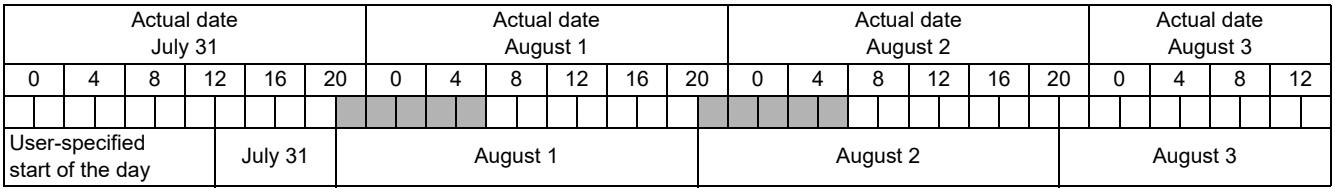

Ex. 2: When the start of the day is specified as 22:00 on August 1 and 2, and the power save period is set to the period between 22:00 and 8:00

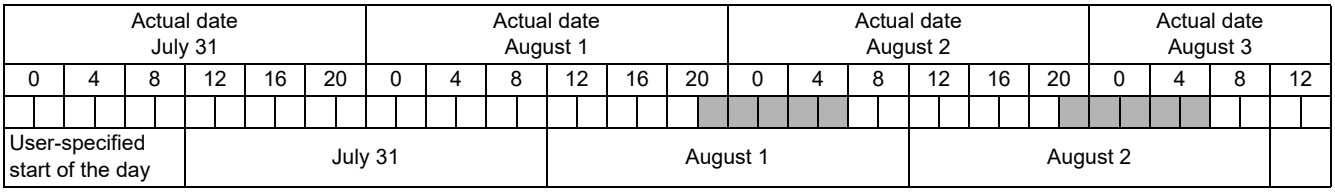

Shaded areas in the figure show when power save is enabled.

Power save will be disabled when a system controller is connected to the system or when power save is disabled.

Using demand control on the connected units

(1) Using the demand control (contact point) of the connected units without using power save on the remote controller

Steps

Step 1

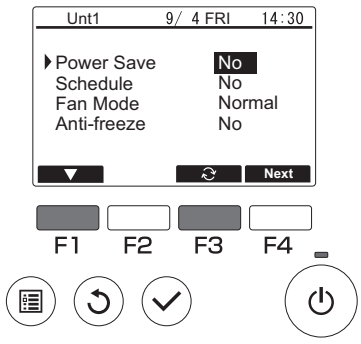

Press [F4] on the Menu screen.
Press [F1] to access power save.
Press [F3] to select No.

- Do not set the power save settings on the remote controller.
- Some items may not be available for selection.

(2) Using both the demand control (contact point) of the connected units and power save on the remote controller

The system will be controlled based on the lower of the following: demand control setting and power save control capacity.

If the contact-ON time and the power save start time are set to different times, whichever the earlier will be valid. Refer to the table below.

Control values for using power save and demand control

Period	Power save value	Demand control value	Actual control target capacity
12:00-6:30	– (100%)	– (100%)	100%
6:30-7:00	– (100%)	70%	70%
7:00-11:30	60%	70%	60%
11:30-12:00	60%	– (100%)	60%

en

Ex, When power save is enabled between 7:00 and 12:00 at the control capacity of 60%, and the contact for the connected unit is on (capacity setting of 70%)

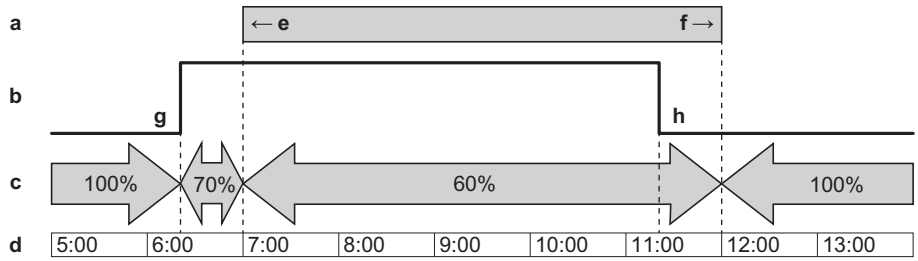

a Power save time period setting
b Unit contact input
c Max. capacity of the unit
d Time
e Power save starts
f Power save ends
g Contact ON
h Contact OFF

- While the contact is on or power save is enabled, the maximum capacity will be limited to whichever is the lower between the power save and demand control settings.
- While the contact is off and power save is disabled, units will operate at 100% capacity.
- Units will operate at up to 100% capacity during non-power-saving periods.

- The maximum frequency is restricted depending on the inputs of maximum demand capacity and maximum low-noise capacity as shown below.

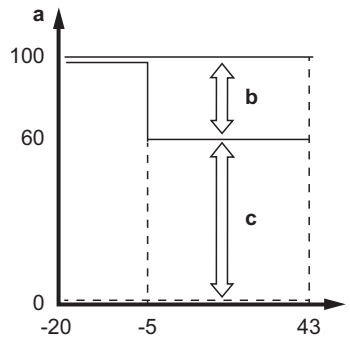

Lowest outdoor temperature in a day (ºCDB)

a Capacity setting (%)
b Settable range
Set to 0% when the capacity setting is lower than 60%.
c Not settable

Steps

Step 1

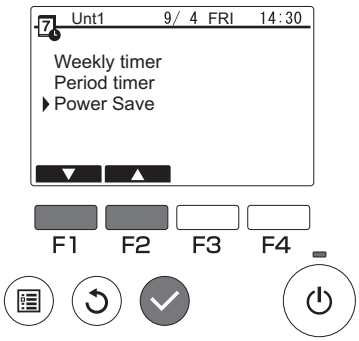

From the Menu screen, select Schedule, then power save.
Press [⊛].

Step 2

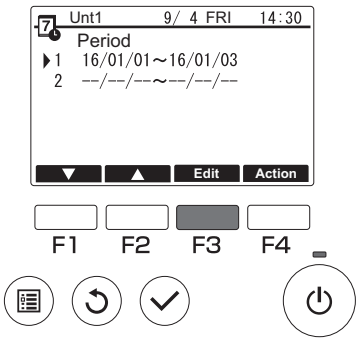

Two different periods can be set by specifying the start and end dates.

- If the dates specified in periods 1 and 2 overlap, only the dates specified in period 1 will be valid.

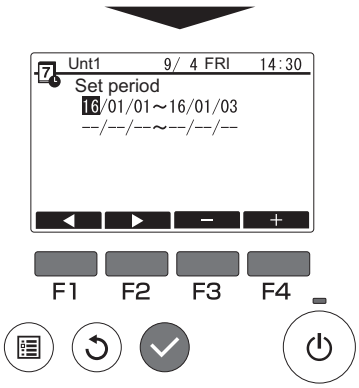

Refer to Step 3 of the section on using the period timer for how to set the periods.
Refer to the following page(s) for detail. "Using the Period timer" (p. 90)

Step 3

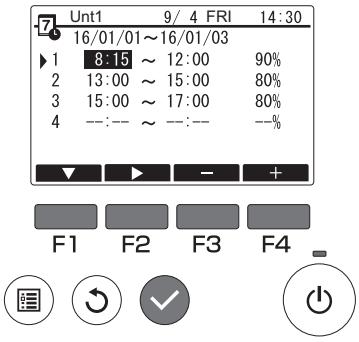

Refer to Step 4 of the section on using the period timer for how to set the power save start/end time and the demand control value.
Refer to the following page(s) for detail. "Using the Period timer" (p. 90)
Press [⊛] to save the change.

Step 4

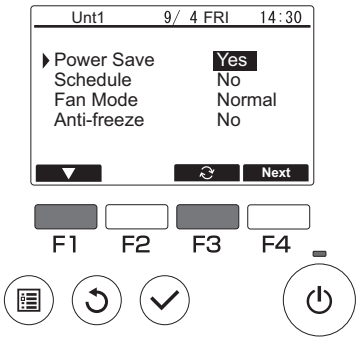

Refer to Step 4 of the section on using the weekly timer for how to enable power save.
Refer to the following page(s) for detail. "Using the Weekly timer" (p. 89)

en

8-4-6. Setting the functions

Set the functions for each connected unit from the remote controller as necessary.
Record any changes made to the functions of the connected units to allow for proper management.

Steps

Step 1

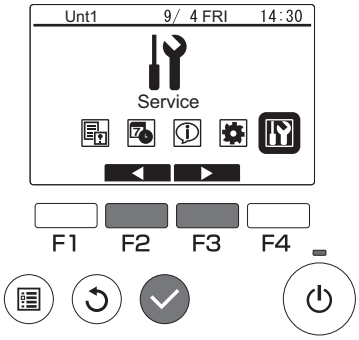

From the Menu screen, select Service, and press [⊘].

Step 2

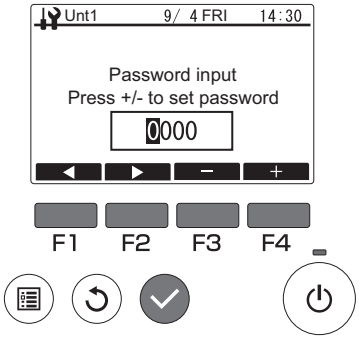

A password screen will appear.
Enter the current maintenance password (a 4-digit number), and press [⊘] to access the Service menu.

Step 3

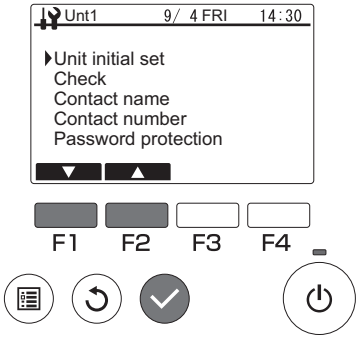

Select "Unit initial set" from the Service menu, and press [⊘].

Step 4

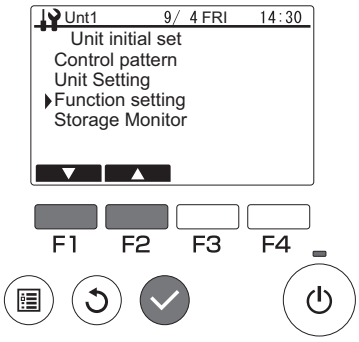

Select "Function setting" from the Unit initial set menu, and press [⊘].

Step 5

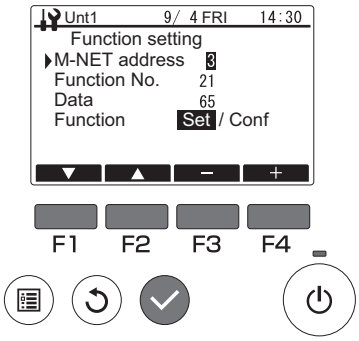

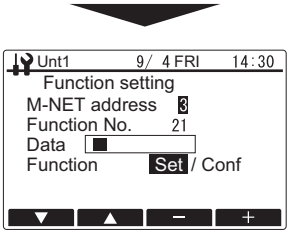

The Function setting screen will be displayed.
Press the [F1] or [F2] button to select the connected unit "M-NET address", "Function No." or "Data", and then press the [F3] or [F4] button to change to the desired setting.
After changing to the desired setting, press [⊘].
The setting data transmission screen will be displayed.

To check the current settings, set the "M-NET address" or "Function No." of the connected unit to be checked, select "Conf" in "Function" and press [⊘].
The screen indicating that the confirmation is being processed will be displayed and the data will be displayed when checking is completed.

Step 6

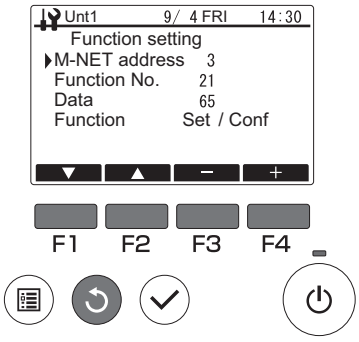

Once data transmission is completed, the screen indicating that the settings have been made will be displayed.
To continue making settings, press [↺] to return to the screen in procedure 3.
Use the same procedure to set other connected unit and Data settings.

Function setting	Item
015	Mode 1 differential value (Schedule value)
016	Mode 2 differential value (Schedule value)
017	Mode 3 differential value (Schedule value)
021(*1)	Outlet hot water temperature setting

*1:When setting the set temperature for Mode 1, Mode 2, or Mode 3 to 65ºC or higher, the setting for Function No.21 is required.
*2:This setting will be used for the secondary side outlet hot water temperature when the secondary side control is enabled.

8-4-7. Monitoring the operating status from the remote controller

Steps

Step 1

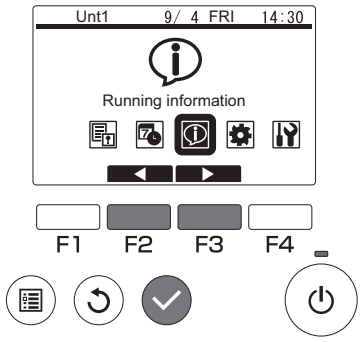

From the Menu screen, select Running information, and press [⊘].

Step 2

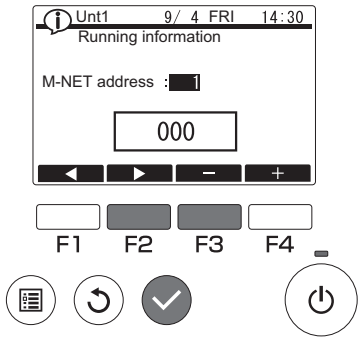

Set the M-NET address with [F2] and [F3], and press [⊘].

Step 3

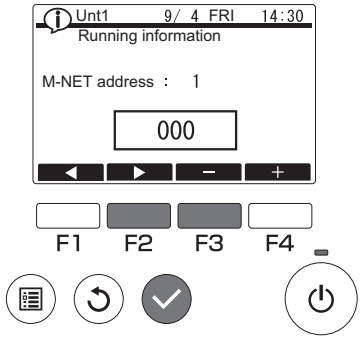

Enter a 3-digit running inf. number, and press [⊘].

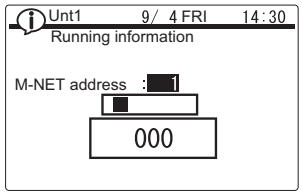

The setting-inf.-send screen will appear.

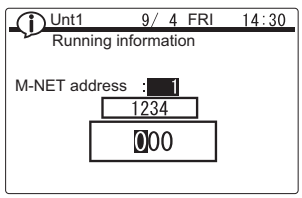

If sent successfully, the running inf. will appear on the screen.
Press [↺] to return to the screen shown in Step 2.
Set other M-NET address and running inf. number in the same way.

Running information No.

Running information No.	Description	Remarks
001	High pressure operation data [× 0.1 MPa]	Data of last hot water storage operation
002	Low pressure operation data [× 0.1 MPa]	
003	Outlet hot water temperature operation data [× 0.1ºC]	
004	Outdoor air temperature during operation [× 0.1ºC]	
005	Total compressor operation time [× 10 h]	
006	Outlet hot water temperature [× 0.1ºC]	Current values
007	Inlet water temperature [× 0.1ºC]	
008	High pressure [× 0.1 MPa]	
009	Low pressure [× 0.1 MPa]	
010	Discharge refrigerant temperature [× 0.1ºC]	
011	Suction refrigerant temperature [× 0.1ºC]	
012	Operating frequency [× 0.1 Hz]	
013	Flow sensor [× 0.1 L/min]	
016	Secondary side outlet water temperature [× 0.1ºC]	
017	Secondary side flow sensor [× 0.1 L/min]	
018	Secondary side pump output [%]	

Example

No. 001

Remote control display: 38

Actual value: 3.8 MPa

9. Specifications

Model			QAHV-N560YA-HPB (-BS)
Power source			3-phase 4-wire 380-400-415 V 50 Hz
Capacity *1		kW	40
		kcal/h	34400
		BTU/h	136480
	Power input	kW	10.31
	Current input	A	17.8-16.9-16.3
	COP (kW/kW)		3.88
Capacity *2		kW	40
		kcal/h	34400
		BTU/h	136480
	Power input	kW	10.97
	Current input	A	20.0-19.0-18.3
	COP (kW/kW)		3.65
Capacity *3		kW	40
		kcal/h	34400
		BTU/h	136480
	Power input	kW	11.6
	Current input	A	20.4-19.4-18.7
	COP (kW/kW)		3.44
Maximum current input		A	33.8
Allowable external pump head			77 kPa
Temperature range	Inlet water temp.		5-63ºC 41-145.4ºF
	Outlet water temp.		55-90ºC (when the secondary side control is enabled: 55-80ºC) 131-194ºF (when the secondary side control is enabled: 131-176ºF)
	Outdoor temp.	D.B.	-25~43°C -13~109.4°F
Sound pressure level (measured at 1 m below the unit in an anechoic room) *1		dB (A)	56
Water pipe diameter and type	Inlet	mm (in.)	19.05 (Rc 3/4"), screw pipe
	Outlet	mm (in.)	19.05 (Rc 3/4"), screw pipe
External finish			Acrylic painted steel sheet <MUNSELL 5Y 8/1 or similar>
External dimensions H × W × D		mm	1837 (1777 not including legs) × 1220 × 760
		in.	72.3 (69.9 not including legs) × 48.0
Net weight		kg (lbs)	400 (882)
Design pressure	R744	MPa	14
	Water	MPa	0.5
Heat exchanger	Water-side		Copper tube coil
	Air-side		Plate fins and copper tube
Compressor	Type		Inverter scroll hermetic compressor
	Maker		MITSUBISHI ELECTRIC CORPORATION
	Starting method		Inverter
	Motor output	kW	11.0
	Case heater	W	45
	Lubricant		PAG
Fan	Air flow rate	m^3/min	220
		L/s	3666
		cfm	7768
	Type × Quantity		Propeller fan
	Control, Driving mechanism		Inverter-control, Direct-driven by motor
	Motor output	kW	0.92
HIC (HIC: Heat inter-changer) circuit			Copper pipe
Protection	High pressure protection		High pres. Sensor & High pres. Switch at 14MPa (643psi)
	Inverter circuit		Overheat and overcurrent protection
	Compressor		Overheat protection
	Fan motor		Thermal switch
Defrosting method			Auto-defrost mode (Hot gas)
Refrigerant	Type × original charge		CO_2 (R744) 6.50 kg
	Flow and temperature control		LEV

*1: Under normal heating conditions at the outdoor temperature of 16ºCDB/12ºCWB (60.8ºFDB/53.6ºFWB), the outlet water temperature of 65ºC (149ºF), and the inlet water temperature of 17ºC (62.6ºF)
*2: Under normal heating conditions at the outdoor temperature of 7ºCDB/6ºCWB (44.6ºFDB/42.8ºFWB), the outlet water temperature of 65ºC (149ºF), and the inlet water temperature of 9ºC (48.2ºF)
*3: Under normal heating conditions at the outdoor temperature of 7ºCDB/6ºCWB (44.6ºFDB/42.8ºFWB), the outlet water temperature of 65ºC (149ºF), and the inlet water temperature of 15ºC (59.0ºF)

- Due to continuing improvements, specifications may be subject to change without notice.
- Do not use steel pipes as water pipes.
- Keep the water circulated at all times. Blow the water out of the pipes if the unit will not be used for an extended period of time.
- Do not use ground water or well water.
- Do not install the unit in an environment where the wet bulb temperature exceeds 32ºC.
- The water circuit must be a closed circuit.
- There is a possibility that the unit may abnormally stop when it operates outside its operating range. Provide backup (ex. boiler start with error display output signal (blue CN511 1-3)) for abnormal stop.
- In a system in which the ascent rate of inlet water temperature becomes 5 K/min or above instantly or 1 K/min or above continuously, this model of units cannot be used. (When the rate of change in the feed water velocity exceeds 1 K/min, the unit capacity and COP may decrease.)
- When the feed water temperature exceeds 30ºC, the supply water temperature may be automatically suppressed to protect the equipment.
  If the feed water temperature is too high, the unit may not operate at the target supply water temperature.
- When the feed water temperature rises to or above 30ºC, the capacity of this unit can significantly decrease. This is a characteristic of the unit. High feed water temperature can also significantly decrease the COP. Keep the feed water temperature from rising too high during operation as much as possible.
- Configure the system so that the temperature difference between the outlet water and the inlet water of the unit is always 20ºC or above. (If the water temperature difference is too small, the supply water temperature becomes uncontrollable.)

Unit converter

Kcal = kW × 860
BTU/h = kW × 3,412
cfm = m^3/min × 35.31
Lb = kg/0.4536

Spec label

MITSUBISHI ELECTRIC CE 0035 UK CA 2571

HOT WATER HEAT PUMP

MODEL **QAHV-N560YA-HPB <H>**

REFRIGERANT	R744 6.5kg
LEGAL REFRIGERATION TON	4.8RT
ALLOWABLE PRESSURE(PS)	HP 14.0MPa (140.0bar) LP 8.5 MPa (85.0 bar)
WEIGHT	400kg
IP CODE	IP24
YEAR OF MANUFACTURE	
SERIAL No.	

RATED VOLTAGE 3N~	V	380	400	415	415
FREQUENCY	Hz	50			
CAPACITY	kW	40.0			
	kcal/h	34400			
	Btu/h	136480			
RATED INPUT	kW	10.97			11.6
COP		3.65			3.44
RATED CURRENT	A	20.0	19.0	18.3	18.7
RATED CONDITION					
OUTLET WATER TEMP.	°C	65			65
INLET WATER TEMP.	°C	9			15
OUTDOOR DB/WB	°C	7/6			7/6

RATED VOLTAGE 3N~	V	380	400	415	
FREQUENCY	Hz	50			
CAPACITY	kW	40.0			
	kcal/h	34400			
	Btu/h	136480			
RATED INPUT	kW	10.31			
COP		3.88			
RATED CURRENT	A	17.8	16.9	16.3	
RATED CONDITION					
OUTLET WATER TEMP.	°C	65			
INLET WATER TEMP.	°C	17			
OUTDOOR DB/WB	°C	16/12			

Contains fluorinated greenhouse gases covered by the Kyoto Protocol.

MANUFACTURER:

MITSUBISHI ELECTRIC CORPORATION
AIR-CONDITIONING & REFRIGERATION SYSTEMS WORKS
5-66, TEBIRA, 6-CHOME, WAKAYAMA CITY, JAPAN

MADE IN JAPAN

DWG.No.KC79P648

MITSUBISHI ELECTRIC CE 0035 UK CA 2571

HOT WATER HEAT PUMP

MODEL **QAHV-N560YA-HPB-BS <H>**

REFRIGERANT	R744 6.5kg
LEGAL REFRIGERATION TON	4.8RT
ALLOWABLE PRESSURE(PS)	HP 14.0MPa (140.0bar) LP 8.5 MPa (85.0 bar)
WEIGHT	400kg
IP CODE	IP24
YEAR OF MANUFACTURE	
SERIAL No.	

RATED VOLTAGE 3N~	V	380	400	415	415
FREQUENCY	Hz	50			
CAPACITY	kW	40.0			
	kcal/h	34400			
	Btu/h	136480			
RATED INPUT	kW	10.97			11.6
COP		3.65			3.44
RATED CURRENT	A	20.0	19.0	18.3	18.7
RATED CONDITION					
OUTLET WATER TEMP.	°C	65			65
INLET WATER TEMP.	°C	9			15
OUTDOOR DB/WB	°C	7/6			7/6

RATED VOLTAGE 3N~	V	380	400	415
FREQUENCY	Hz	50		
CAPACITY	kW	40.0		
	kcal/h	34400		
	Btu/h	136480		
RATED INPUT	kW	10.31		
COP		3.88		
RATED CURRENT	A	17.8	16.9	16.3
RATED CONDITION				
OUTLET WATER TEMP.	°C	65		
INLET WATER TEMP.	°C	17		
OUTDOOR DB/WB	°C	16/12		

Contains fluorinated greenhouse gases covered by the Kyoto Protocol.

MANUFACTURER:

MITSUBISHI ELECTRIC CORPORATION
AIR-CONDITIONING & REFRIGERATION SYSTEMS WORKS
5-66, TEBIRA, 6-CHOME, WAKAYAMA CITY, JAPAN

MADE IN JAPAN

DWG.No.KC79P648

10.Maintenance

Replacing parts before problems occur has less impact on other parts and is desirable for preventing problems from occurring. The table below shows the inspection details of each component to be performed during periodic inspections and the approximate timing of replacement. The replacement guideline should only be used as a guide, and actual replacement timing should be determined in consideration of usage conditions.
The following replacement cycles do not indicate the warranty period.

Components		Check item	Inspection cycle (times/year)	Replacement cycle
Refrigerant circuit component	Compressor	High/low pressures, vibration, sound, insulation resistance, loose terminals	2	40,000 hours
	Heat exchanger	High/low pressures, soiled fins	2	10 years
	Gas cooler	High/low pressures, water-pressure lost	2	10 years
	Solenoid valve	Operation, leakage, clogging	2	7 years
	Expansion valve	Operation	2	7 years
	Strainer	Temperature difference at the inlet/outlet	1	At the time of heavy service
	Pipe	Contact abrasion, vibration	1	10 years
Electrical circuit component	Relay	Operation, contact resistance, insulation resistance	2	6 years
	Solenoid coil	Insulation resistance	2	7 years
	Crank case heater	Insulation resistance	2	20,000 hours
	Fuse	External appearance	2	8 years
	Control board, inverter board	External appearance	2	8 years
	Switch	Operation, contact resistance	2	8 years
	Pressure switch, sensor	Contact resistance, chafed capillary	2	7 to 10 years
	Terminal block	Loose terminals	2	8 years
	Wiring, connector	Wire disconnection, loose wire, deterioration, chafing	2	10 years
Fan	Fan	Balance	2	10 years
	Motor	Insulation resistance, sound, vibration	2	6 to 10 years
Water circuit component	Pump	Operation, vibration, sound	2	5 years
	Two-way valve	Operation, sound, insulation resistance	2	5 years
	O-ring	Scratches, deformation	1	5 years
	Pipe	Water leakage	1	5 years

This product is designed and intended for use in the residential, commercial and light-industrial environment.

Please be sure to put the contact address/telephone number on this manual before handing it to the customer.

MITSUBISHI ELECTRIC CORPORATION

HEAD OFFICE: TOKYO BLDG., 2-7-3, MARUNOUCHI, CHIYODA-KU, TOKYO 100-8310, JAPAN
Authorized representative in EU: MITSUBISHI ELECTRIC EUROPE B.V.
HARMAN HOUSE, 1 GEORGE STREET, UXBRIDGE, MIDDLESEX UB8 1QQ, U.K.

WT10996X04_en