DRAWING NUMBER	REVISION
MEU-UK/FTC7/WZXXX/2ZM/1C	1

DIP Switch Configuration Settings

	SYSTEM MASTER BOARD 1*			
	SW1	SW2	SW3	SW4
1	OFF	See Control*	See Control*	ON
2	ON	OFF	OFF	ON
3	ON	OFF	OFF	OFF
4	ON	OFF	OFF	OFF
5	OFF	OFF	ON	OFF
6	OFF	ON	OFF	OFF
7	OFF	ON	OFF	
8	See Control*	OFF	OFF	

SW7–1 MIXING VALVE SETTING
ON – ZONE 1 AND 2
OFF – ONLY ZONE 2

	BOARD 2*			
	SW1	SW2	SW3	SW4
1	OFF	OFF	OFF	ON
2	ON	OFF	OFF	OFF
3	ON	OFF	OFF	OFF
4	OFF	OFF	OFF	OFF
5	OFF	OFF	OFF	OFF
6	OFF	OFF	OFF	OFF
7	ON	OFF	OFF	
8	OFF	ON	OFF	

SW1–3 (OUTDOOR)–ON *
SW5–5 & SW8–3 (OUTDOOR)–ON

	BOARD 3*			
	SW1	SW2	SW3	SW4
1	OFF	OFF	OFF	ON
2	ON	OFF	OFF	OFF
3	OFF	OFF	OFF	OFF
4	OFF	OFF	OFF	OFF
5	OFF	OFF	OFF	OFF
6	OFF	OFF	OFF	OFF
7	ON	OFF	OFF	
8	OFF	ON	OFF	

SW1–4 (OUTDOOR)–ON *
SW5–5 & SW8–3 (OUTDOOR)–ON

*Please see system control section of the outdoor installation manual for 3 or more units.

Wiring Connections (Outputs)

EQUIPMENT	TERMINAL / FTC7 BOARD
P1	OUT1 TBO.1 1–2 / 2*
P2	OUT1 TBO.1 1–2 / 3*
P3	OUT2 TBO.1 3–4 / 1*
P4	OUT3 TBO.1 5–6 / 1*
3WAY V. 1	OUT4 TBO.2 7–9 / 2*
MIXING V.	OUT5 TBO.2 1–3 / 1*
IMM. H.	**IHC 2/T1 4/T2 / 1*

Wiring Connections (Inputs)

EQUIPMENT	TERMINAL / FTC7 BOARD
T1	THW1 CNW12 1–2 / 2*
T2	THW2 CNW12 3–4 / 2*
T3	THW1 CNW12 1–2 / 3*
T4	THW2 CNW12 3–4 / 3*
T5	THW1 CNW12 1–2 / 1*
T6	THW2 CNW12 3–4 / 1*
T7	THW6 TBI.5 7–8 / 1*
T8	THW8 TBI.5 3–4 / 1*
T9	THW7 TBI.5 5–6 / 1*
T10	THW9 TBI.5 1–2 / 1*
T11	THW5B CNW5 / 1*
FS1	INA1 TBI.6 3–5 (CN1A) / 2*
FS2	INA1 TBI.6 3–5 (CN1A) / 3*

Power Supply

EQUIPMENT	STARTING CURRENT	MAX CURRENT	MCB	MIN. CABLE
PUZ–WZ50VAA (–BS)	2A	13A	16A	3x1.5mm²
PUZ–WZ60VAA (–BS)	2A	13A	16A	3x2.5mm²
PUZ–WZ85VAA (–BS)	2A	23A	25A	3x2.5mm²
PUZ–WZ85YAA (–BS)	2A	12A	16A	5x1.5mm²
PUZ–WZ100VAA (–BS)	2A	30A	32A	3x4mm²
PUZ–WZ100YAA (–BS)	2A	12A	16A	5x1.5mm²
PUZ–WZ120VAA (–BS)	2A	37A	40A	3x6mm²
PUZ–WZ120YAA (–BS)	2A	12A	16A	5x1.5mm²
PAC–IF082B–E		10A	16A	3x1.5mm²
IMM. H.		13A	16A	3x2.5mm²

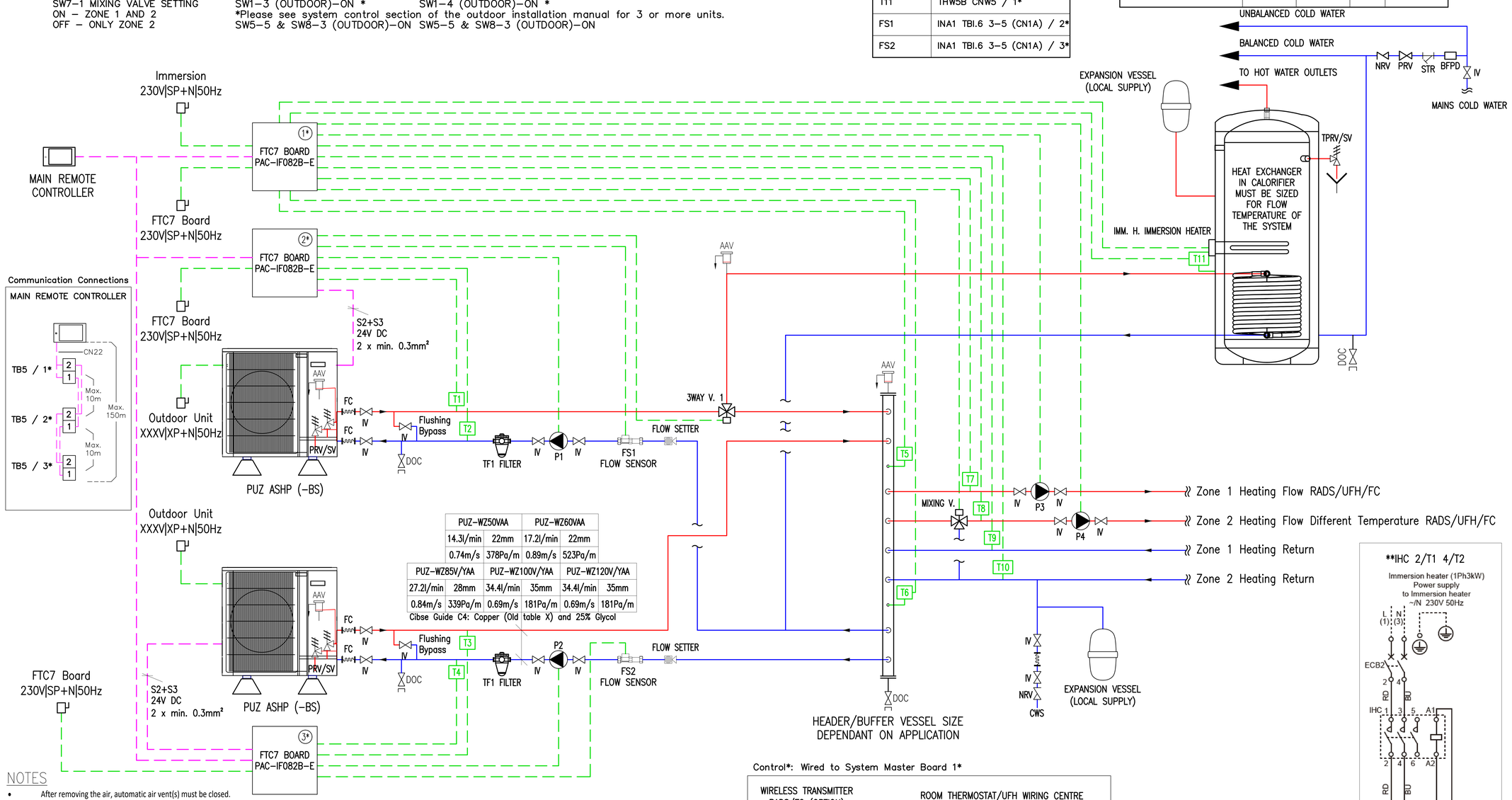

PUZ–WZ50VAA		PUZ–WZ60VAA	
14.3l/min	22mm	17.2l/min	22mm
0.74m/s	378Pa/m	0.89m/s	523Pa/m

PUZ–WZ85V/YAA		PUZ–WZ100V/YAA		PUZ–WZ120V/YAA	
27.2l/min	28mm	34.4l/min	35mm	34.4l/min	35mm
0.84m/s	339Pa/m	0.69m/s	181Pa/m	0.69m/s	181Pa/m

Cibse Guide C4: Copper (Old table X) and 25% Glycol

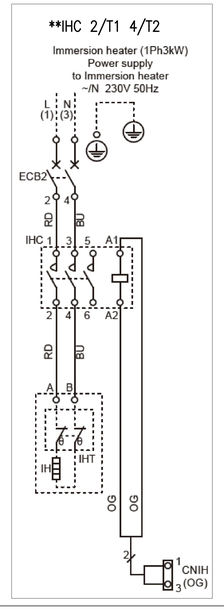

Control*: Wired to System Master Board 1*

WIRELESS TRANSMITTER RADS/FC (OPTION)

WR WIRELESS RECEIVER (OPTION)

CNRF // SW1–8 ON

ADVANCE AUTO ADAPTATION // SW5–2 ON

AND/OR

ROOM THERMOSTAT/UFH WIRING CENTRE (LOCAL SUPPLY)

Zone 1: IN1 TBI.1 7–8 (2 core Volt Free) // SW2–1 ON

Zone 2: IN6 TBI.2 5–6 (2 core Volt Free) // SW3–1 ON

NOTES

- After removing the air, automatic air vent(s) must be closed.
- Flexible hoses shall be used to connect the Ecodan unit to the primary pipe work.
- Refer to 'Installation Manual' and 'Instruction Book' for further 'Technical Information'.
- A back flow prevention device may include check valves, a water meter or an additional PRV.
- The Ecodan outdoor unit must be installed on anti-vibration mounts. Rubber mounting blocks are recommended.
- This schematic must be used in conjunction with the corresponding technical submission document issued by Mitsubishi Electric.
- Adequate provision should be made to prevent condensate from collecting around the outdoor units. A soak away or drip tray can be used.
- Isolation valves and flushing bypass circuit are recommended for the outdoor unit. This is best practice and not required for warranty purposes.
- A flow sensor PAC-FS01-E is required to be installed in the return pipe work to each unit. Flow setters are optional and they have the ability to change the flow rates if needed.
- Adequate filtration must be used on the return pipework to each Ecodan outdoor unit. This can be either; Magnetic filter (TF1 supplied by MEUK) or strainer with air dirt separator.
- The contractor should make the necessary arrangements to ensure the design of the system meet the requirement of the application and where possible follow industry guidelines and best practice.
- If a device that prevents backflow is installed on the cold water supply to the PRV then a means of accommodating expansion due to local warming of the pipe is recommended to be fitted between the device and PRV.
- It is the responsibility of the installing contractor to provide adequate protection against freezing of pipe work. MEUK recommend 25% glycol dosage of the primary circuit. If the water circuit freezes and damages the equipment the warranty will become void.
- All water systems should be designed, installed and commissioned in accordance with industry good practice guidelines; such as, but not limited to: BSRIA Guide BG2/2010 - Water System Commissioning, BSRIA Guide BG29/2011 - Pre-Commissioning of Pipework Systems, BSRIA Guide BG50/2013 - Water Treatment for Closed Heating & Cooling Systems, CIBSE Commissioning Code W - Water distribution systems.

© Copyright in this drawing is the property of Mitsubishi Electric. It must not be reproduced nor amended nor used for the execution of any works whether in connection with the proposed works for which it is prepared or otherwise without the express consent in writing of Mitsubishi Electric.

All dimensions are in mm unless otherwise stated

For information only, DO NOT SCALE drawing

All works shall be carried out in accordance with the Specification

Contractor must verify all dimensions on site before commencing any work or shop drawings

LEGEND

- AAV AUTOMATIC AIR VENT (After removing the air, automatic air vent(s) must be closed)
- IV ISOLATING VALVE
- DOC DRAIN OFF COCK
- NRV NON RETURN VALVE
- PRV/SV PRESSURE RELIEF VALVE/SAFETY VALVE
- STR STRAINER
- FC FLEXIBLE CONNECTION
- PRV PRESSURE REDUCING VALVE
- P PUMP
- T TEMPERATURE SENSOR
- TF1 FILTER/STRAINER
- FS FLOW SENSOR
- BFPD BACK FLOW PREVENTION DEVICE (if fitted)
- TPRV/SV TEMPERATURE PRESSURE RELIEF VALVE/SAFETY VALVE
- FLOW SETTER

HYDRAULIC COMPONENTS SUPPLIED BY MEUK:

FLEXIBLE PIPES
FLOW SENSOR

OPTIONAL HYDRAULIC COMPONENTS SUPPLIED BY MEUK:

TF1 FILTER
FLOW SETTER

REV	DESCRIPTION	DESN	CHKD	DATE

MITSUBISHI ELECTRIC

CLIENT

PROJECT
PUZ–OUTDOOR UNITS
STANDARD SCHEMATIC ECODAN CASCADE

TITLE
MECHANICAL SERVICES
MITSUBISHI 2X FTC7 ECODAN UNITS
TO CYLINDER
TO LOW LOSS HEADER/BUFFER VESSEL
2 HEATING ZONES
DIFFERENT FLOW TEMPERATURES

SCALE	ORIGINAL SIZE		DATE	
NTS	A0		MARCH 2025	
DRAWN	DESIGNED	INIT	CHECKED	INIT
M. G.	M. G.		A.S.	

DRAWING NUMBER	REVISION
MEU–UK/FTC7/WZXXX/2ZM/1C	1